ASME PCC-2–2008
(Revision of ASME PCC-2–2006)

Repair of Pressure Equipment and Piping

AN AMERICAN NATIONAL STANDARD

The American Society of Mechanical Engineers

ASME
SETTING THE STANDARD

ASME PCC-2–2008
(Revision of ASME PCC-2–2006)

Repair of Pressure Equipment and Piping

AN AMERICAN NATIONAL STANDARD

The American Society of Mechanical Engineers

ASME
SETTING THE STANDARD

Date of Issuance: April 7, 2009

This Standard will be revised when the Society approves the issuance of a new edition. This Standard will become effective 6 months after the Date of Issuance. There will be no addenda issued to this edition.

ASME issues written replies to inquiries concerning interpretations of technical aspects of this document. Interpretations are published on the ASME Web site under the Committee Pages at http://cstools.asme.org as they are issued.

ASME is the registered trademark of The American Society of Mechanical Engineers.

This code or standard was developed under procedures accredited as meeting the criteria for American National Standards. The Standards Committee that approved the code or standard was balanced to assure that individuals from competent and concerned interests have had an opportunity to participate. The proposed code or standard was made available for public review and comment that provides an opportunity for additional public input from industry, academia, regulatory agencies, and the public-at-large.

ASME does not "approve," "rate," or "endorse" any item, construction, proprietary device, or activity.

ASME does not take any position with respect to the validity of any patent rights asserted in connection with any items mentioned in this document, and does not undertake to insure anyone utilizing a standard against liability for infringement of any applicable letters patent, nor assumes any such liability. Users of a code or standard are expressly advised that determination of the validity of any such patent rights, and the risk of infringement of such rights, is entirely their own responsibility.

Participation by federal agency representative(s) or person(s) affiliated with industry is not to be interpreted as government or industry endorsement of this code or standard.

ASME accepts responsibility for only those interpretations of this document issued in accordance with the established ASME procedures and policies, which precludes the issuance of interpretations by individuals.

No part of this document may be reproduced in any form,
in an electronic retrieval system or otherwise,
without the prior written permission of the publisher.

The American Society of Mechanical Engineers
Three Park Avenue, New York, NY 10016-5990

Copyright © 2009 by
THE AMERICAN SOCIETY OF MECHANICAL ENGINEERS
All rights reserved
Printed in U.S.A.

CONTENTS

Foreword iv
Preparation of Technical Inquiries v
Committee Roster vi
Summary of Changes vii

Part 1 **Scope, Organization, and Intent** 1

Part 2 **Welded Repairs** 5
Article 2.1 Butt-Welded Insert Plates in Pressure Components 5
Article 2.2 External Weld Overlay to Repair Internal Thinning 11
Article 2.3 Seal-Welded Threaded Connections and Seal Weld Repairs 17
Article 2.4 Welded Leak Box Repair 19
Article 2.5 Welded Lip Seals (in the course of preparation) 23
Article 2.6 Full Encirclement Steel Reinforcing Sleeves for Piping 24
Article 2.7 Fillet Welded Patches With Reinforcing Plug Welds 31
Article 2.8 Alternatives to Traditional Welding Preheat 37
Article 2.9 Alternatives to Postweld Heat Treatment 42
Article 2.10 In-Service Welding Onto Carbon Steel Pressure Components or Pipelines 45
Article 2.11 Weld Buildup, Weld Overlay, and Clad Restoration 57
Article 2.12 Fillet Welded Patches 63
Article 2.13 Threaded or Welded Plug Repairs 68

Part 3 **Mechanical Repairs** 71
Article 3.1 Replacement of Pressure Components 71
Article 3.2 Freeze Plugs 73
Article 3.3 Damaged Threads in Tapped Holes 78
Article 3.4 Flaw Excavation and Weld Repair 88
Article 3.5 Flange Repair and Conversion 94
Article 3.6 Mechanical Clamp Repair 97
Article 3.7 Pipe Straightening or Alignment Bending 101
Article 3.8 Damaged Anchors in Concrete (Postinstalled Mechanical Anchors) 104
Article 3.9 Valves With Pressure-Seal-Type Bonnets (in the course of preparation) 113
Article 3.10 Hot Bolting (in the course of preparation) 114
Article 3.11 Hot and Half Bolting Removal Procedures 115
Article 3.12 Inspection and Repair of Shell and Tube Heat Exchangers 119

Part 4 **Nonmetallic and Bonded Repairs** 131
Article 4.1 Nonmetallic Composite Repair Systems for Pipelines and Pipework: High-Risk Applications 131
Article 4.2 Nonmetallic Composite Repair Systems for Pipelines and Pipework: Low-Risk Applications 161
Article 4.3 Nonmetallic Internal Lining for Pipe: Sprayed Form for Buried Pipe 174

Part 5 **Examination and Testing** 186
Article 5.1 Pressure and Tightness Testing of Piping and Equipment 186
Article 5.2 Nondestructive Examination in Lieu of Pressure Testing for Repairs and Alterations 200

FOREWORD

ASME formed an Ad Hoc Task Group on Post Construction in 1993 in response to an increased need for recognized and generally accepted engineering standards for the inspection and maintenance of pressure equipment after it has been placed in service. At the recommendation of this Task Group, the Board on Pressure Technology Codes and Standards (BPTCS) formed the Post Construction Committee (PCC) in 1995. The scope of this committee was to develop and maintain standards addressing common issues and technologies related to post-construction activities and to work with other consensus committees in the development of separate, product-specific codes and standards addressing issues encountered after initial construction for equipment and piping covered by Pressure Technology Codes and Standards. The BPTCS covers non-nuclear boilers, pressure vessels (including heat exchangers), piping and piping components, pipelines, and storage tanks.

The PCC selects standards to be developed based on identified needs and the availability of volunteers. The PCC formed the Subcommittee on Inspection Planning and the Subcommittee on Flaw Evaluations in 1995. In 1998, a Task Group under the PCC began preparing Guidelines for Pressure Boundary Bolted Flange Joint Assembly. In 1999, the PCC formed the Subcommittee on Repair and Testing. In 2002, the Subcommittee on Flaw Evaluation was dissolved, and replaced by the Joint ASME/API Committee on Fitness for Service. Other topics are under consideration and may be developed into future guideline documents.

The subcommittees were charged with preparing standards dealing with several aspects of the in-service inspection and maintenance of pressure equipment and piping. The Inspection Planning Standard provides guidance on the preparation of a risk-based inspection plan. Defects that are identified are then evaluated, when appropriate, using the procedures provided in the Fitness for Service. Finally, if it is determined that repairs are required, guidance on repair procedures is provided in the Repair of Pressure Equipment and Piping Standard. These documents are in various stages of preparation.

None of these documents are Codes. They provide recognized and generally accepted good practices that may be used in conjunction with Post-Construction Codes, such as API 510, API 570, and NB-23, and with jurisdictional requirements.

The first edition of ASME PCC-1, *Guidelines for Pressure Boundary Bolted Flange Joint Assembly*, was approved for publication in 2000. ASME PCC-1-2000 was approved by the American National Standards Institute (ANSI) as an American National Standard on November 15, 2000.

The first edition of ASME PCC-2, *Repair of Pressure Equipment and Piping*, was approved for publication in 2004. This revision was approved by ANSI as an American National Standard on September 25, 2008.

PREPARATION OF TECHNICAL INQUIRIES

INTRODUCTION

The ASME Post-Construction Standards Committee will consider written requests for interpretations and revisions of the rules of this Standard and develop new rules if dictated by technological development. The Committee's activities in this regard are limited strictly to interpretations of the rules or to the consideration of revisions to the present rules on the basis of new data or technology. As a matter of published policy, ASME does not "approve," "certify," "rate," or "endorse" any item, construction, proprietary device, or activity, and, accordingly, inquiries requiring such consideration will be returned. Moreover, ASME does not act as a consultant on specific engineering problems or on the general application or understanding of the rules. If, based on the inquiry information submitted, it is the opinion of the Committee that the inquirer should seek professional assistance, the inquiry will be returned with the recommendation that such assistance be obtained.

An inquiry that does not provide the information needed for the Committee's full understanding will be returned.

REQUIREMENTS

Inquiries shall be limited strictly to interpretations of the rules or to the consideration of revisions to the present rules on the basis of new data or technology. Inquiries shall meet the following requirements:

(a) Scope. Involve a single rule or closely related rules in the scope of the standard. An inquiry letter concerning unrelated subjects will be returned.

(b) Background. State the purpose of the inquiry, which may be either to obtain an interpretation of rules of this Standard, or to propose consideration of a revision to the present rules. Provide concisely the information needed for the Committee's understanding of the inquiry, being sure to include reference to the applicable Part, Article, Edition, Addenda, paragraphs, figures, and tables. If sketches are provided, they shall be limited to the scope of the inquiry.

(c) Inquiry Structure

(1) Proposed Question(s). The inquiry shall be stated in condensed and precise question format, omitting superfluous background information, and, where appropriate, composed in such a way that "yes" or "no" (perhaps with provisos) would be an acceptable reply. The inquiry statement should be technically and editorially correct.

(2) Proposed Reply(ies). Provide a proposed reply stating what the inquirer believes that the standard requires.

If in the inquirer's opinion, a revision to the standard is needed, recommended wording shall be provided in addition to information justifying the change.

SUBMITTAL

Inquiries shall be submitted in typewritten form; however, legible handwritten inquiries will be considered. They shall include the name and mailing address of the inquirer, and may either be sent by email to SecretaryPCC@asme.org, or by mail to the following address:

Secretary
ASME Post Construction
Three Park Avenue
New York, NY 10016-5990

ASME PRESSURE TECHNOLOGY POST CONSTRUCTION COMMITTEE

(The following is the roster of the Committee at the time of approval of this Standard.)

STANDARDS COMMITTEE OFFICERS

D. A. Lang, Sr., *Chair*
J. R. Sims, Jr., *Vice Chair*
S. J. Rossi, *Secretary*

STANDARDS COMMITTEE PERSONNEL

G. A. Antaki, Becht Engineering Co., Inc.
J. E. Batey, The Dow Chemical Co.
C. Becht IV, Becht Engineering Co., Inc.
D. L. Berger, PPL Generation LLC
P. N. Chaku, ABB Lummus Global, Inc.
C. D. Cowfer, *Contributing Member,* Consultant
P. C. Hackford, Utah Labor Commission
W. J. Koves, UOP LLC
D. A. Lang, Sr., FM Global
C. R. Leonard, Life Cycle Engineering
E. Michalopoulos, *Contributing Member,* City of Konzai, Greece
K. Mokhtarian, Consultant
C. C. Neely, Becht Engineering Co., Inc.
T. M. Parks, The National Board of Boiler and Pressure Vessel Inspectors
J. T. Reynolds, Consultant
S. C. Roberts, Shell Global Solutions US, Inc.
C. D. Rodery, BP North American Products, Inc.
S. J. Rossi, The American Society of Mechanical Engineers
C. W. Rowley, The Wesley Corp.
M. E. G. Schmidt, Consultant
J. R. Sims, Jr., Becht Engineering Co., Inc.

REPAIR AND TESTING SUBCOMMITTEE (PCC)

C. Becht IV, *Chair,* Becht Engineering Co., Inc.
C. D. Rodery, *Vice Chair,* BP North American Products, Inc.
S. J. Rossi, *Secretary,* The American Society of Mechanical Engineers
G. A. Antaki, Becht Engineering Co., Inc.
L. P. Antalffy, Fluor Daniel
M. A. Boring, Edison Welding Institute
J. A. Brown, AREVA NP
P. N. Chaku, ABB Lummus Global, Inc.
H. J. Dammeyer, The Ohio State University
N. Y. Faransso, KBR
S. J. Findlan, EPRI RRAC
B. F. Hantz, ExxonMobil Research and Engineering Co.
C. R. Harley, General Physics Corp.
W. F. Hart, Furmanite America, Inc.
D. B. Kadakia, T. D. Williamson, Inc.
W. J. Koves, UOP LLC
K. Mokhtarian, Consultant
W. F. Newell, Jr., W. F. Newell & Associates, Inc.
T. M. Parks, The National Board of Boiler and Pressure Vessel Inspectors
J. T. Reynolds, Consultant
S. C. Roberts, Shell Global Solutions US, Inc.
C. W. Rowley, The Wesley Corp.
S. C. Shah, ExxonMobil Research and Engineering Co.
D. B. Stewart, Kansas City Deaerator Co.
J. Taagepera, Chevron Energy Technology Co.
T. Tahara, *Contributing Member,* T & T Technology
E. Upitis, Upitis & Associates, Inc.
R. H. Walker, Citadel Technologies

ASME PCC-2–2008
SUMMARY OF CHANGES

Following approval by the ASME Post Construction Committee and ASME, and after public review, ASME PCC-2–2008 was approved by the American National Standards Institute on September 25, 2008.

ASME PCC-2–2008 includes editorial changes, revisions, and corrections introduced in ASME PCC-2–2006, as well as the following changes identified by a margin note, **(08)**.

Page	*Location*	*Change*
2	Table 1	Revised
11	Article 2.2	Title revised
31	Article 2.7	Added
37	Article 2.8	Added
42	Article 2.9	Added
45	Article 2.10	Added
57	Article 2.11	Added
63	Article 2.12	Added
68	Article 2.13	Added
74	Article 3.2	(1) Paragraph 2.7 deleted, and paras. 2.8 through 2.10 redesignated as 2.7 through 2.9, respectively (2) Paragraph 3.1 revised in its entirety
80	Article 3.3	References in section 7 updated
84, 85	Article 3.3, Mandatory Appendix II	(1) In para. II-1.1, nomenclature for SA_n corrected to read ΣA_n by errata (2) In para. II-1.2, ASME B1.1 reference in Note updated (3) Title of para. II-1.2.1 revised
94, 95	Article 3.5	(1) Paragraph 2.2 revised (2) Paragraph 3.1 revised (3) Paragraph 4.2 revised (4) New para. 4.5 added
115	Article 3.11	Added
119	Article 3.12	Added
131–142	Article 4.1	(1) Title revised (2) In 1.1, subpara. (g) added (3) Paragraph 2.1 title revised (4) In 3.1, L_{defect} added (5) In 3.3.3, subpara. (e) added (6) In 3.4.2, last paragraph revised and new eqs. (1) and (2) added (7) Table 2 title revised

Page	*Location*	*Change*
		(8) In 3.4.3, sixth paragraph revised (9) Tables 4 through 7 redesignated as Tables 3 through 6, respectively, and previous Table 3 deleted (10) In 3.4.5, last paragraph revised (11) In 5.3, first paragraph revised
148	Article 4.1, Mandatory Appendix II	In II-3, subpara. (c) added
150	Article 4.1, Mandatory Appendix III	In III-2, second and third paragraphs revised
153	Article 4.1, Mandatory Appendix V	(1) In V-2.1, new third paragraph added (2) New eq. (V-2) added
156	Article 4.1, Mandatory Appendix VII	In VII-1, last sentence of first paragraph revised
157	Article 4.1, Mandatory Appendix VIII	(1) In VIII-3, subpara. (c) revised (2) In VIII-4, first three paragraphs revised (3) In VIII-5, subpara. (b)(2) revised
158	Article 4.1, Mandatory Appendix IX	In IX-1, term *disbondment* added
161–166	Article 4.2	(1) Title revised (2) Paragraph 1.1 revised in its entirety (3) Paragraph 1.2 revised in its entirety (4) In 1.4, first sentence revised (5) Paragraph 2.1 title revised (6) Paragraph 2.2 title revised (7) Paragraph 2.4 revised (8) In 3.1, definition for d revised; symbol E corrected to read E_c; and definitions for L_{defect}, S_{wa}, and S_{wh} added (9) Paragraph 3.2 revised in its entirety (10) Paragraph 3.3 revised in its entirety (11) Paragraph 3.4 revised in its entirety (12) Table 1 revised (13) In Table 2, under Materials preparation, “resin” replaced with “polymer” (14) Paragraph 4.1 revised in its entirety (15) Paragraph 4.3 revised in its entirety (16) Paragraph 5.1 revised in its entirety (17) Paragraph 5.2 revised in its entirety (18) Section 6 revised in its entirety (19) In Table 3, entry for Interface revised; all references to “resin” replaced with “polymer” (20) References in section 7 updated
169	Article 4.2, Mandatory Appendix II	(1) Paragraph II-1 revised in its entirety (2) In II-2, subparas. (a), (b), and (d) revised (3) Paragraph II-3 revised in its entirety

Page	*Location*	*Change*
170	Article 4.2, Mandatory Appendix III	(1) Paragraph III-1 revised in its entirety (2) Paragraph III-2 revised in its entirety
171	Article 4.2, Mandatory Appendix IV	(1) Paragraph IV-1 revised in its entirety (2) Paragraph IV-2.3 revised in its entirety
172	Article 4.2, Mandatory Appendix V	(1) Paragraph V-1 revised in its entirety (2) Paragraph V-2 revised in its entirety (3) In para. V-3(c), term "resin" replaced with "polymer" (4) Paragraph V-4 revised in its entirety (5) Paragraph V-5(b)(2) revised
173	Article 4.2, Mandatory Appendix VI	(1) In VI-1, term *disbondment* added (2) Definitions for *hardener* and *reinforcement* revised (3) Term *resin system* revised to read *polymer system* (4) Term *thermoset resin* revised to read *thermoset polymer*
174	Article 4.3	Revised in its entirety
183	Article 4.3, Mandatory Appendix II	Revised in its entirety
185	Article 4.3, Mandatory Appendix III	(1) In III-1, definitions for *cured-in-place pipe (CPP)*, *curing*, *epoxies*, *pultruded carbon*, and *reinforcement* revised (2) Also in III-1, term *polymer* added and terms *resin filler* and *thermoset plastic* revised to read *polymer filler* and *thermoset polymer*, respectively (3) Paragraph III-2 updated
186	Article 5.1	Revised in its entirety
200	Article 5.2	Added

INTENTIONALLY LEFT BLANK

STANDARD FOR THE REPAIR OF PRESSURE EQUIPMENT AND PIPING

PART 1
SCOPE, ORGANIZATION, AND INTENT

1 SCOPE

This Standard provides methods for repair of equipment and piping within the scope of ASME Pressure Technology Codes and Standards[1] after it has been placed in service. These repair methods include relevant design, fabrication, examination, and testing practices and may be temporary or permanent, depending on the circumstances.

The methods provided in this Standard address the repair of components when repair is deemed necessary based on appropriate inspection and flaw assessment. These inspection and flaw evaluation methods are not covered in this document, but are covered in other post-construction codes and standards.

Only technical procedures and information are provided; administrative or policy requirements are outside of the scope of this Standard.

2 ORGANIZATION

This Standard is divided into five Parts.

(a) Part 1 covers the scope, organization, and intent and is applicable to all articles in this Standard. Table 1 provides guidance for the applicability of repair methods listed in this Standard.

(b) Part 2 covers repair methods and techniques that include the use of welding, brazing, soldering, or other methods involving metal deposit.

(c) Part 3 covers mechanical repairs, with or without sealant, such as bolted clamps or fixtures and includes all repair methods not covered in Part 2 or Part 4.

(d) Part 4 covers repairs using nonmetallic means, such as nonmetallic liners and wraps, and bonding (e.g., joining by epoxy), including bonding of metallic components.

(e) Part 5 covers examination and testing methods and techniques.

3 INTENT

3.1 General

This Standard provides technical information, procedures, and recommendations for repair methods that were determined by consensus to be recognized and generally accepted good engineering practice. Where equipment repair is subject to jurisdictional regulation, jurisdictional approvals may be required.

3.2 Definitions

The words *may*, *shall*, and *should* are used in the repair articles of PCC-2 and they have the following intent:

may: indicates an action that is permitted, but not required.

shall: an action that is mandatory. It indicates an action that is an essential element of the repair method that cannot be eliminated.

should: an action that is not mandatory. It indicates an action that when performed, is generally considered to be good practice; however, there are some circumstances when the action is not appropriate or required, so the word *should* is used to provide flexibility for the article to cover a broad range of circumstances. It is not mandatory unless so specified by others in the application of these articles.

3.3 Administrative Requirements

For administrative requirements such as inspection, documentation, and quality control, the user is referred to an applicable post-construction code and to the jurisdictional requirements. In the absence of an applicable post-construction code or jurisdictional requirements, the owner of the pressure equipment or piping should

[1] Equipment and piping within the scope of ASME Pressure Technology Codes and Standards includes piping (including pipelines) and piping components (such as valves), boilers, pressure vessels (including heat exchangers), and storage tanks.

Table 1 Guide for the Selection of Repair Technique

Article Number and Title	General Wall Thinning	Local Wall Thinning	Pitting	Gouges	Blisters	Laminations	Circumferential Cracks	Longitudinal Cracks	Other
2.1 Butt-welded insert plates in pressure components	Y	Y	Y	Y	Y	Y	Y	Y	Note (1)
2.2 External weld overlay to repair methods for internal thinning	N	Y	Y	Y	N	N	N	N	Note (2)
2.3 Seal-welded threaded connections and seal weld repairs	NA	NA	NA	NA	NA	NA	NA	NA	Note (3)
2.4 Welded leak box repair	N	Y	Y	N	N	N	R	R	Note (4)
2.6 Full encirclement steel reinforcing sleeves for piping									
Type A sleeve	Y [Note (5)]	Y [Note (5)]	Y [Note (5)]	R	N	N	N	N	. . .
Type B sleeve	Y	Y	Y	Y	Y	Y	Y	R	. . .
2.8 Alternatives to traditional welding preheat	Y	Y	R	Y	R	Y	R	R	Note (6)
2.9 Alternatives to postweld heat treatment	Y	Y	Y	Y	S	Y	Y	Y	Note (7)
2.10 In-service welding onto carbon steel pressure components or pipelines	N	N	N	N	N	N	N	N	Note (8)
2.11 Weld buildup, weld overlay, and clad restoration	N	Y	S	S	S	N	N	N	. . .
2.12 Fillet weld patches	N	Y	Y	Y	S	N	R	R	. . .
2.13 Fillet welded patches with reinforcing plug welds	N	Y	Y	Y	S	N	R	R	. . .
2.14 Threaded or welded plug repairs	N	Y	Y	Y	N	N	Y	Y	. . .
3.1 Replacement of pressure components	Y	Y	Y	Y	Y	Y	Y	Y	. . .
3.2 Freeze plugs	NA	NA	NA	NA	NA	NA	NA	NA	Note (9)
3.3 Damaged threads in tapped holes	N	N	N	N	N	N	N	N	Note (10)
3.4 Flaw excavation and weld repair	NA	NA	Y	Y	Y	Y	Y	Y	Note (11)
3.5 Flange refinishing	N	N	Y	Y	S	N	Y	N	Note (12)
3.6 Mechanical clamp repair	N	Y	Y	R	N	N	R	R	Notes (2), (13)
3.7 Pipe straightening or alignment bending	N	N	N	N	N	N	N	N	Note (14)
3.8 Damaged anchors in concrete	NA	NA	NA	NA	NA	NA	NA	NA	Note (15)
3.11 Hot and half bolting removal procedures	N	N	N	N	N	N	N	N	. . .
3.12 Inspection and repair of shell and tube heat exchangers	Y	Y	Y	R	Y	N	Y	Y	. . .
4.1 Nonmetallic composite repair systems for piping and pipework: high-risk applications	Y	Y	Y	R	Y	Y	R	R	. . .
4.2 Nonmetallic composite repair systems for piping and pipework: low-risk applications	Y	Y	Y	R	Y	Y	Y	R	. . .
4.3 Nonmetallic internal lining for pipe: sprayed form for buried pipe	Y	Y	Y	Y	Y	Y	Y	Y	. . .
5.1 Pressure and tightness testing of piping and equipment	N	N	N	N	N	N	N	N	Note (16)
5.3 Nondestructive examination in lieu of pressure testing for repairs and alterations	NA	NA	NA	NA	NA	NA	NA	NA	Note (17)

Y = generally appropriate
S = may be acceptable, but is not generally used for this condition
R = may be used, but requires special cautions
N = not generally appropriate
NA = not applicable

NOTES:

(1) This method may apply to replacement of nozzles, flat spots, and dents.

(2) See Part 2, Article 2.1, Limitations.

--`,``,`,``,``,`,-`---`,`,`,`,`,`--------```,`,-`,`--

Table 1 Guide for the Selection of Repair Technique (Cont'd)

NOTES (Cont'd):
(3) This repair technique applies to seal welded threaded joints for leak tightness.
(4) Welded leak box repair applies to leaking flanges, valves, pipe components, and welded and mechanical joints.
(5) For internal defects, the cause of defect shall be understood or arrested or a Type B sleeve is recommended.
(6) Alternative provisions for weelded repair.
(7) Also may apply to new construction or to all methods requiring welding.
(8) Generally appropriate for surface welding on carbon steel substrates.
(9) This technique is used for isolating sections of pipes.
(10) Repair of damaged threads in stud holes.
(11) Also applies to the repair of hardened surfaces.
(12) Radial cracks.
(13) Gasket and packing leaks = Y.
(14) Pipe straightening.
(15) Repair of damaged anchor in concrete.
(16) This is not a repair technique; however, it may apply to most methods of repair.
(17) This is an alternative to pressure testing.

establish the administrative requirements. A post-construction code is one that provides requirements and guidance for inspection and/or repair of equipment after it has been placed in service, and may include the references to original code of construction. Examples of post-construction codes include NB-23, API 510, API 570, and API 653.

3.4 Application

Users of the articles contained in this document are cautioned that these articles have been developed generically and are recommended for general applications. They may not necessarily be suitable for all applications. Precautionary considerations are provided, but should not be considered all inclusive. Sound engineering practices and judgment should be used to determine the applicability of a specific method or part of a method to a specific application. Each repair should be subject to an appropriate review by qualified personnel, and this review should consider subsequent deterioration of the repaired component.

Some limitations and considerations are contained in section 2 of the individual articles.

3.5 Alternative Use

While this Standard covers repair of equipment within the scope of ASME Pressure Technology Codes and Standards, it may be used on equipment constructed in accordance with other Codes and Standards.

3.6 Articles' Independence

Individual articles in this Standard may be used independently of other articles, except when otherwise noted. However, this Part (Part 1) applies to all articles in this Standard.

3.7 Repair Life

Many of the repair techniques included in this Standard are considered to be permanent, intended to remain in place for the life of the repaired component. Others may only be suitable for short-term service, and should be replaced with a more permanent repair at the appropriate opportunity. The anticipated life of the repair depends on many circumstances, and could include consideration of risk. As such, this Standard does not classify repair methods as permanent or temporary. Rather, technical considerations that affect the expected life of the repair are stated in the individual articles.

3.8 Code References

Reference to specific codes is generally avoided in this Standard because the equipment or piping could have been constructed in accordance with a number of different codes. Where such a reference is provided, it is generally the intent to include, by reference, a specific technical provision.

3.9 Welding

Requirements for welding, including qualification of welding procedures, welders, and welding operators, should generally follow an applicable code of construction or an applicable post-construction code, except when otherwise specified herein.

3.10 Allowable Stress

Calculations involving the allowable stress use the allowable stress from the original code of construction or an applicable post-construction code, unless otherwise specified in specific articles.

3.11 Examination

When qualifications of examiners, methods of examination, extent of examination, and acceptance criteria are not specified, they should follow the requirements of an applicable code of construction or an applicable post-construction code.

3.12 Records

The owner should keep records that document the repair. Specific requirements for documentation are not provided in this Standard. The owner should retain records that comply with applicable jurisdictional and post-construction code requirements. Documentation may include such items as a description of the condition that required attention and its cause, repair procedures that were used, photos prior to and after the repair, examination procedures and records, heat treatment records, test records, and the names of the persons/firms performing the repair and examination and their certification. The documentation forms part of the history of the pressure component and should be retained as long as it is relevant.

PART 2
WELDED REPAIRS

Article 2.1
Butt-Welded Insert Plates in Pressure Components

1 DESCRIPTION

1.1 General Considerations

The repair of pressure components by butt-welded insert plates involves the replacement of pressure boundary material in a pressure component with an insert plate attached by full penetration butt welds. This repair method is applicable to cylindrical, spherical, and conical shells and to flat pressure components. It may be used for single and double curvature shells. It may also be used on other pressure components (such as formed heads) if the curvature of the replaced section matches the curvature of the original pressure part. It is not limited by the size of the pressure component, except where practical considerations preclude the use of an insert, such as on small diameter pipe or tube. It may be used on small diameter pressure components if special care is taken to ensure a close fit of the insert plate and the existing pressure component and that the repaired pressure component meets the tolerance requirements of the applicable code of construction.

1.2 Replacement of Local Areas in Pressure Vessel Shells or Pipe Walls

This repair method is intended to be used to replace portions of pressure-retaining vessel shells or pipe walls that have been damaged by cracks, local wall thinning from erosion, corrosion, and other damage mechanisms. The insert plate may contain one or more nozzles/manways.

1.3 Replacement of Entire Component

Replacement of an entire component, shell plate, or a complete shell course of a cylindrical shell, or a complete circular segment of a sphere, or a complete head, or a section of a pipe is not considered in this repair method.

2 LIMITATIONS

2.1 Part 1 of This Standard

Part 1 of this Standard contains additional requirements and limitations. This Article shall be used in conjunction with Part 1.

2.2 Additional Considerations and Limitations

When applying this repair method, consideration shall be given to compatibility of materials, operating conditions for the intended life of the component, fitting and welding to minimize the residual stresses and distortions, and any limitations on nondestructive examination and pressure testing.

2.3 Loadings

This method may be used for equipment subject to either internal or external pressure. If the pressure component is subject to external pressure, additional consideration shall also be given to any loss of buckling strength as a result of permanent distortions or misalignment in the repaired component. If the pressure component is subject to cyclic loading, additional consideration shall be given to the effect of permanent distortions on the fatigue life of the repaired component.

2.4 Corrosion-Resistant Weld Overlay or Cladding

This repair method may also be used in vessels that are either clad with corrosion-resistant lining or weld overlay. The insert plate cladding or weld overlay shall be compatible with the existing materials and suitable for the intended service. Consideration shall also be given to the use of weld details and welding procedures suitable for the intended service.

2.5 Dissimilar Metals

Use of dissimilar materials (base metal and welds) is not prohibited, but the materials shall meet the required minimum mechanical properties for the pressure component and shall be carefully evaluated for compatibility

between the dissimilar materials and the service environment, both internal and external. If thermal fatigue is a possibility, consideration shall be given to the potential for accelerated fatigue cracking in the dissimilar metals combination.

3 DESIGN

3.1 Code of Construction

The insert plate thickness, material, and welds shall meet the design requirements in the applicable code of construction for the existing pressure component into which it is being installed and shall be consistent with the joint efficiency or joint quality factors used in the original design, except as permitted in para. 3.3. The allowable stresses shall be the same as in the applicable code of construction for the existing component.

3.2 Materials

Insert plates and welds should be of the same material as the existing pressure component, or of another material that has at least equal notch toughness and allowable stress, conforms to the requirements of the applicable code of construction, and is suitable for the intended service. Where ASME materials are used, the replacement material should have the same ASME P-Number designation as the pressure component material into which the insert is being installed.

3.3 Insert Plate Thickness

The insert plate thickness should be not less than the nominal thickness of the material it welds into. If a thinner insert plate than the nominal thickness of the material it welds into must be used, it shall be evaluated for the intended service (such as fatigue due to cyclic loading) using the rules in the applicable code of construction for the pressure component, or the applicable post-construction code. See para. 4.1.5.

3.4 Rectangular and Square Insert Plates

Rectangular and square insert plates shall have corners rounded to a radius, except when the entire shell plate is replaced. Rectangular and square insert plates 13 mm (½ in.) thick and up to and including 25 mm (1 in.) thick should have a 75 mm (3 in.) or a larger corner radius. Insert plates less than 13 mm (½ in.) thick may have smaller corner radii. Insert plates over 25 mm (1 in.) thick should have a 150 mm (6 in.) or a larger corner radius.

3.5 Flush Inserts

Flush inserts in pipe or tube may be round or oblong cutouts, as shown in Fig. 1, or rectangular cutouts with rounded corners.

Fig. 1 Flush Insert in Pipe or Tube

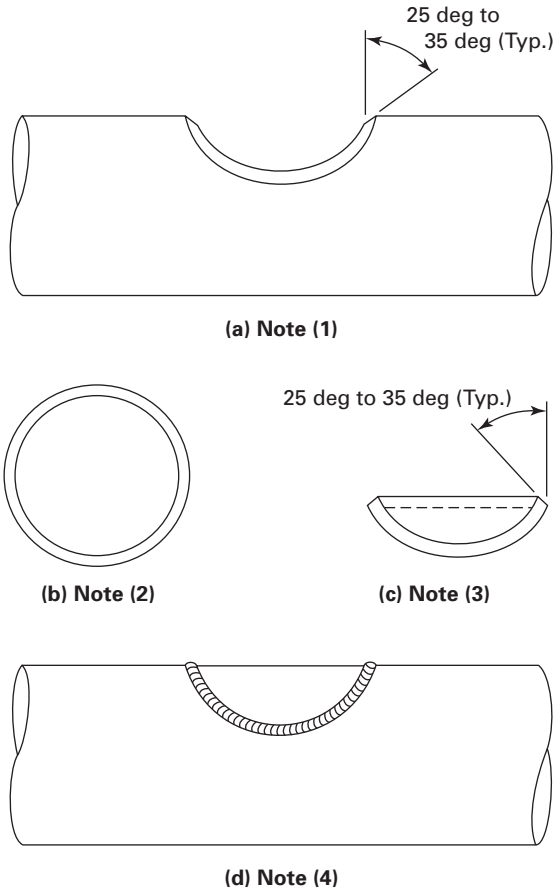

NOTES:
(1) Side view of cutout in pipe or tube with edge bevels. (Fig. 1 shows single-grooved joint detail with 25 deg to 35 deg edge bevel in pipe or tube. Other joint details and edge bevels may be used, as appropriate for a particular weld joint.)
(2) Plan view of insert with edge bevels. (Fig. 1 shows an insert with one-sided joint detail.)
(3) Side view of the insert with edge bevels. (Other joint details and edge bevels may be used, as appropriate for a particular weld joint.)
(4) Side view of welded insert in pipe or tube.

3.6 Insert Plate Size

The insert plate shall be of sufficient size to replace the entire area of the existing pressure component that has been assessed as not being fit for continued operation and to ensure that all welds are in sound material.

3.6.1 Minimum Size of Insert Plates. The minimum diameter, or length and width dimensions of non-post-weld heat-treated, butt-welded carbon and low alloy steel insert plates shall be the lesser of $12t$ or 380 mm (15 in.) (where t is the thickness of the parent material). See para. 3.8.

3.7 Structural Stability at Cutouts

Consideration should be given to structural stability and possible distortion of the unsupported plate edges of large openings (cutouts) in the vessel shell. An assessment should be made for the need of temporary supports around the unsupported edges of such openings during removal of the shell section to be replaced with an insert plate. The assessment shall consider all loading conditions that may occur on the vessel and the component during the repair, including structural stability of vessels during PWHT.

3.8 Insert Plates With Nozzles

The nozzle/manway reinforcement in insert plates with nozzles shall meet the design requirements and weld details of the applicable code of construction for the pressure component. The minimum diameter of insert plate with a nozzle shall be the larger of the following:

(a) for all nozzle/manway assemblies, the diameter of the nozzle/manway penetration plus the width needed for nozzle reinforcement and any edge bevels

(b) for non-postweld heat-treated carbon and low alloy steel nozzle/manway assemblies, the diameter of the insert plate needed to maintain a minimum distance of 150 mm (6 in.) between the nozzle attachment weld and the nearest edge of the insert plate butt weld. However, the diameter of the insert plate for nozzles having an outside diameter 300 mm (12 in.) or smaller need not be larger than 2 times the outside diameter of the nozzle. (See also Figs. 2 and 3.)

Fig. 2 Flush Insert Plate (With or Without Nozzle/Manway) With Its Butt Weld Intersecting Existing Butt Weld in Shells or Heads

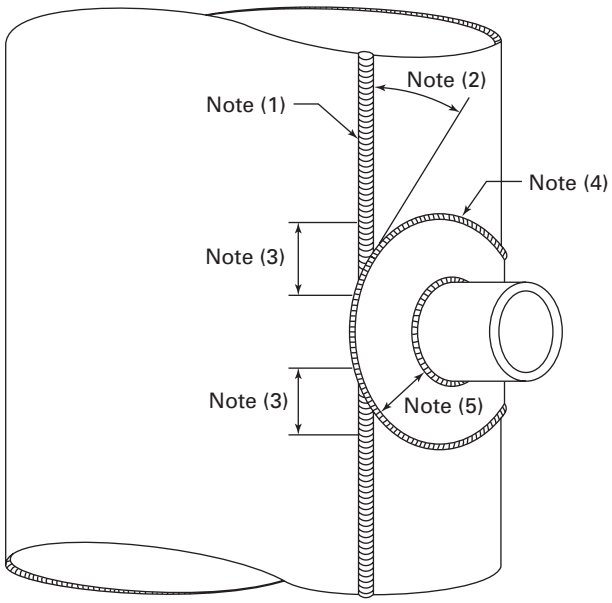

NOTES:
(1) Existing butt weld in vessel shell or head. (Fig. 2 shows butt weld in a cylindrical shell.)
(2) Thirty deg minimum angle.
(3) Full RT or UT, or MT or PT both sides of existing butt weld, 100 mm (4 in.) min. each side of intersection with insert plate.
(4) Insert plate butt weld. Full RT or UT, or MT or PT both sides of weld.
(5) For nonpostweld heat-treated carbon and low alloy steel nozzle/manway assemblies, 150 mm (6 in.) minimum between the toe of the nozzle fillet weld and the nearest edge of the insert plate butt weld (see para. 3.8).

4 FABRICATION

4.1 Cutting and Forming

4.1.1 Edge Bevels. Edge bevels in the insert plate and in the pressure component may be prepared by thermal cutting, arc gouging, machining, or grinding. The method should be appropriate for the material and welding process(es) used.

All edges prepared for welding shall be examined to the requirements of the applicable code of construction or post-construction code for the pressure component being repaired. All unacceptable indications shall be repaired to the requirements of the applicable code of construction or post-construction code.

4.1.2 Forming. Forming the insert plate to the desired shape may be accomplished by any process that does not impair the properties of the plate material. It may be rolled or pressed to the proper curvature such that it conforms to the curvature of the vessel shell after it has been installed and welded into the vessel shell, pipe, or tube. For pipe or tube inserts, the insert may also be cut from another piece of pipe or tube of the same diameter and thickness as the pipe or tube to be repaired. Thicker pipe or tube inserts may be used, provided they meet the requirements of para. 4.1.5.

4.1.3 Forming Strains in Carbon and Low Alloy Steels. Carbon steel and low alloy steel insert plates should be heat treated (stress relieved, normalized, or quenched and tempered, if appropriate) subsequently when the resulting extreme fiber elongation during cold forming is more than 5%, as determined by the following formulas:

(a) For single curvature shells (cylinders)

$$\text{Percent extreme fiber elongation} = \frac{75t}{R_f}\left(1 - \frac{R_f}{R_o}\right), \%$$

(b) For double curvature (heads and spherical shells),

$$\text{Percent extreme fiber elongation} = \frac{50t}{R_f}\left(1 - \frac{R_f}{R_o}\right), \%$$

where

R_f = final centerline radius, mm (in.)

Fig. 3 Intersecting "Doghouse" Type Insert Plate Butt Weld (With or Without Nozzle/Manway) With Shell Butt Weld in Vessel Shells and Heads

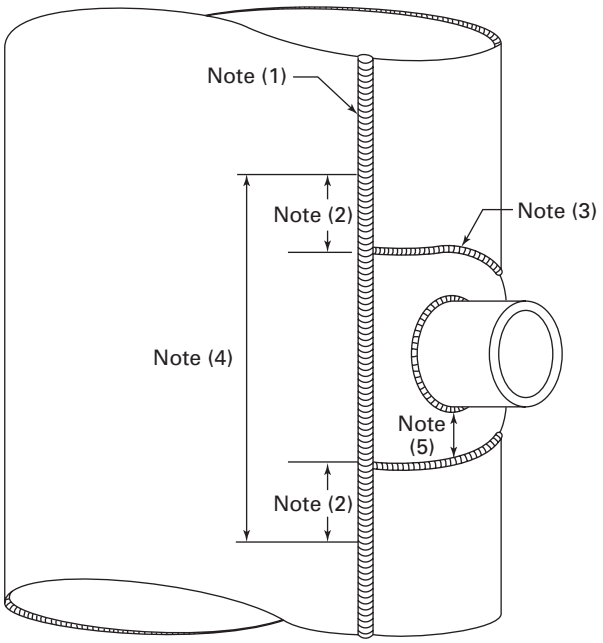

NOTES:
(1) Existing butt weld in vessel shell or head. (Fig. 3 shows butt weld in a cylindrical shell.)
(2) Length of cut in shell butt weld, 150 mm (6 in.) minimum on each side of intersecting insert plate butt weld.
(3) Insert plate butt weld.
(4) Cut existing shell butt weld to 150 mm (6 in.) minimum on each side of intersecting insert plate butt weld and bevel edges (or arc gouge edges) to the desired edge bevels. Reweld after completion of insert plate butt weld. Full RT or UT, or MT or PT both sides of new weld.
(5) For nonpostweld heat-treated carbon and low alloy steel nozzle/manway assemblies, 150 mm (6 in.) minimum between the toe of the nozzle fillet weld and the nearest edge of the insert plate butt weld (see para. 3.8).

R_o = original centerline radius, mm (in.). (Radius equals infinity for flat plate.)
t = plate thickness, mm (in.)

As an alternative, the rules of the original code of construction may be used.

4.1.4 Forming Strains in Other Materials. Cold-forming strains (e.g., from bending) in materials other than carbon and low alloy steel shall not exceed the limitations in the applicable code of construction without a subsequent heat treatment.

4.1.5 Alignment at Edges of Insert Plate. The alignment at edges of the insert plate butt weld shall be such that the maximum offset is within the limitations of the applicable code of construction for the pressure component. If the insert plate thickness exceeds these limitations, the edge(s) of the insert plate shall have a tapered transition having a length not less than 3 times the offset between the adjacent surfaces of abutting sections.

4.2 Welding

4.2.1 Welded Joints. The weld between the insert plate and the existing pressure component shall be a full penetration butt weld. Where possible, double-welded butt joints should be used.

4.2.2 Strength of Welded Joints. The welded joints (weld metal and heat-affected zones) shall meet the minimum strength[1] and toughness requirements and other requirements in the current edition of the applicable code of construction for the pressure component.

4.2.3 Qualification of Welding Procedures and Welders. Welding procedures, welders, and welding operators shall be qualified in accordance with the requirements of the applicable code of construction or the applicable post-construction code. Welding procedure qualifications shall include impact tests as required by the applicable code of construction for the pressure component. Vessel (production) impact tests are not required.

4.2.4 Welding Materials. Welding materials and processes shall be as currently permitted by the applicable code of construction or post-construction code for the pressure component. Welding of carbon and low alloy steels with low hydrogen electrodes and processes is recommended.

4.2.5 Welds in Damaged Areas. All welds between the insert plate and the existing shell should be in sound material. In some cases, the welds may be in a damaged area, provided any damage is considered in the design of the repair, and the damage has been evaluated and is acceptable by the rules of the applicable post-construction code.

4.2.6 Cleaning of Areas to Be Welded. Oil, grease, paint, scale, and other foreign material shall be removed from the area adjacent to the weld and a sufficient distance away from the weld to avoid contamination.

4.2.7 Fit-Up of Insert Plates. Fit-up of insert plates is important to the integrity of the repair. The weld details and welding procedures shall be such as to facilitate full penetration and to minimize distortion and flat spots due to weld shrinkage and the risk of weld cracking due to the restraint provided by the surrounding material.

[1] Matching strength filler metal as noted in the AWS 5.X filler metal specifications should be used for welding pressure components. Use of as-deposited weld metal with substantially greater strength is not recommended.

4.2.8 One-Sided Welds. For flush inserts in pipe or tube or other pressure components that do not allow two-sided welding, gas tungsten arc welding, or another welding process that provides an acceptable weld on the opposite side, should be used for the initial pass joining the insert to the pipe wall. Subsequent passes may be completed by gas tungsten arc or another welding process. Short Circuit Mode of Gas Metal Arc is not recommended for these types of welds.

4.2.9 Weld Contour. The accessible surfaces of insert plate butt welds shall preferably be ground[2] to a smooth contour, or flush if warranted by the service conditions. The weld toe regions shall blend smoothly with the base material. The reduction of thickness due to grinding shall not exceed 0.8 mm ($\frac{1}{32}$ in.) or 10% of the nominal thickness of the adjoining surface, whichever is less. In no case shall the final thickness be less than the required thickness.

4.3 Weld Spacing Between Nonintersecting Adjacent Butt Welds in Carbon Steel and Low Alloy Steel Pressure Components

4.3.1 Minimum Spacing Between Non-Postweld Heat-Treated Butt Welds. Non-postweld heat-treated butt welds around the periphery of insert plates shall be spaced no closer to existing non-postweld heat-treated butt welds or reinforcing plate attachment welds than

(a) for $t_w \le 13$ mm ($\frac{1}{2}$ in.), 150 mm (6 in.)

(b) for $t_w > 13$ mm ($\frac{1}{2}$ in.), the greater of 250 mm (10 in.) and $8t_w$

where

t_w = thickness of the thicker of the two adjacent butt welds, mm (in.)

4.3.2 Alternative Spacing Between Non-Postweld Heat-Treated Butt Welds. The spacing between adjacent non-postweld heat-treated carbon and low alloy steel butt welds may be reduced to the lesser of $8t_w$ or 200 mm (8 in.) for $t_w \le 40$ mm ($1\frac{1}{2}$ in.), provided both butt welds are ground smooth, 100% RT or UT examined and 100% MT or PT examined after completion of welding in areas where the spacing between the adjacent butt welds is less than that specified in para. 4.3.1. As an alternative, the root pass and the weld, after half of the groove is filled, may be either 100% MT or PT examined in place of the 100% RT or UT examination requirement above. The butt welds with thicknesses less than 13 mm ($\frac{1}{2}$ in.) need only be MT or PT examined. See para. 5.1.

4.3.3 Spacing Betwen Stress-Relieved Butt Welds. The spacing between the adjacent butt welds shall be not less than $2t_w$ if the first butt weld has been stress-relieved before making the second butt weld.

[2] Grinding welds to a smooth contour reduces stress concentrations at weld discontinuities.

4.4 Intersecting Butt Welds in Carbon and Low Alloy Steel Pressure Components

4.4.1 General Considerations. Intersecting insert plate and existing butt welds should be avoided where possible. Where it is impractical for the insert plates to avoid an existing nonstress-relieved butt weld, the insert plate butt weld should be placed such that it intersects the existing butt weld at an angle not less than 30 deg, as shown in Fig. 2. Alternatively, the insert plate may be sized such that it intersects the existing butt weld at a 90 deg angle, as shown in Fig. 3.

4.4.2 Examination. Unless 100% RT or UT examination is required by the applicable code of construction, the insert plate butt weld and 100 mm (4 in.) of the existing butt weld, on both sides of the intersection, shall be 100% MT or PT examined after completion of both welds, as shown in Fig. 2. In case of the "doghouse" type insert plate butt weld shown in Fig. 3, this examination shall be performed on the full length of the new weld along the existing shell butt joint. See para. 5.1.

4.5 Postweld Heat Treatment

4.5.1 General Considerations. The butt welds between the insert plate and the existing pressure component and the weld between the nozzle/manway and the insert plate shall be postweld heat treated (PWHT) when required by the original code of construction or the applicable post-construction code, or for process reasons, except as permitted by the applicable post-construction code. Proper precautions should be taken during the PWHT to avoid distortion of the welded assembly.

4.5.2 Repairs. Repairs to pressure equipment that require PWHT based on service conditions shall be postweld heat treated, unless other means (e.g., engineering evaluation) are provided to ensure that the as-welded joints will be suitable for the service conditions, or as permitted by the applicable post-construction code.

4.5.3 PWHT. For the repaired pressure parts that require PWHT (either Code-mandated or dependent upon service conditions), the PWHT shall be performed in accordance with the applicable code of construction, unless the owner requires a more stringent PWHT (e.g., higher PWHT temperature or longer hold time).

5 EXAMINATION OF WELDS

5.1 Insert Plate Welds

All insert plate welds to the existing pressure component in pressure vessels shall be examined by radiographic (RT) or ultrasonic (UT) examination methods to the extent required by the applicable code of construction or post-construction code for the pressure component. Where UT is used, examination of the root pass

by either magnetic particle (MT) or liquid-penetrant (PT) methods is recommended. The procedures, personnel qualifications, and acceptance criteria shall be in accordance with the applicable code of construction or the applicable post-construction code.

5.2 Finished Welded Surfaces

Unless 100% RT or UT examination is required, all finished welded surfaces shall be examined by magnetic particle (MT) or liquid-penetrant (PT) methods. Examination by the MT or PT methods is recommended for the root pass of single-groove welds and for the backgouge of double-groove welds. No crack-like indications, incomplete fusion, or incomplete penetration are permissible.

5.3 Piping

For piping, all nondestructive examination requirements shall be in accordance with the current requirements in the applicable code of construction or post-construction code.

5.4 Additional Examination Requirements for Carbon and Low Alloy Steels

5.4.1 Rectangular and Square Insert Plates. For rectangular or square insert plates, the welds around the rounded corners, as a minimum, shall be either spot RT or UT examined. As an alternative, the root pass, the weld after half of the groove is filled, and the completed weld shall be either MT or PT examined.

5.4.2 Closely Spaced and Intersecting Welds. See paras. 4.3 and 4.4 for additional examination requirements for closely spaced welds and intersecting welds.

6 PRESSURE TESTING

6.1 General Considerations

If the vessel or pipe can be isolated for pressure testing, and if it is practical to do so, all insert plate welds should be pressure tested as required in the applicable post-construction code. Alternatively, nondestructive examination may be performed in place of pressure testing if permitted by the applicable post-construction code at the location of the pressure equipment, when contamination of the pressure-retaining item by liquids is possible or when pressure testing is not practical.

6.2 Notch Toughness Considerations

(a) Consideration should be given to the effect of service deterioration and embrittlement from prior service conditions on notch toughness characteristics of the pressure component before pressure testing. The personnel shall maintain a safe distance from the pressure component when the pressure is increased for the first time.

(b) Additional safety precautions shall be taken in case of a pneumatic test to reduce the risk of brittle fracture.

(c) Consideration should also be given to any hazards that might be associated with the test medium (toxicity, flammability, explosiveness, etc.).

6.3 Leak Test

A separate leak test (visual, bubble-forming solutions, sniffer, etc.) may be desirable to check for leaks before pressurizing the component to the maximum test pressure. Such a leak test should be performed at a safe pressure that is substantially less than the maximum test pressure by pressurizing the component to a desired pressure and reducing the pressure to the leak test pressure before performing the leak test.

6.4 Vessels and Piping With Insulation or Coating

All testing and inspections should be performed prior to application of insulation or coatings.

Article 2.2
External Weld Overlay to Repair Internal Thinning

(08)

1 DESCRIPTION

1.1 Introduction

This Article addresses the repair of pressure components (piping or pressure vessels) degraded by wall thinning due to flow-accelerated corrosion (FAC), erosion–corrosion (EC) and other internal thinning mechanisms by overlay of weld metal on the exterior of the degraded pipe or pressure vessel section. This Article does not address the repair of cracked components.

1.2 Restoration of Wall Thickness

When appropriate, applying a weld overlay repair to the exterior of a thinning pressure component (pipe/pressure vessel) can provide the necessary structural reinforcement and can eliminate the need for either total replacement of the component or an internal weld repair. Specifically, a weld overlay procedure can be used to structurally restore steel (carbon, low alloy, or austenitic stainless steel materials suitable for welded construction) components to the appropriate wall thickness without resorting to replacement efforts. In some cases, it is possible to perform a repair while the component is in operation. The use of a weld overlay as a permanent repair shall include consideration of the thinning mechanism.

2 LIMITATIONS

2.1 Additional Requirements

Part 1 of this Standard contains additional requirements and limitations. This Article shall be used in conjunction with Part 1.

2.2 Cracking

A weld overlay shall not be used for structural reinforcement when there is indication of any form of cracking.

2.3 Evaluation of Medium

In all cases, the user shall evaluate the flammability, volatility, and potential reactions of the medium within the pressure component prior to application of any welding process. In no case should welding be performed without a thorough understanding of the medium contained within the pressure component. This should also include an evaluation of the medium for potential reactions with the base material due to the heat from welding. Examples of process media that should be properly flushed from the system prior to repair include hydrogen, hydrogen cyanide, oxygen, alkaline/caustic materials, butadiene, acetylenic compounds, H_2S, chlorine, and acids. In some cases, cleaning procedures may be necessary to prepare a pressure component system for repair.

Fig. 1 Weld Overlay Profile

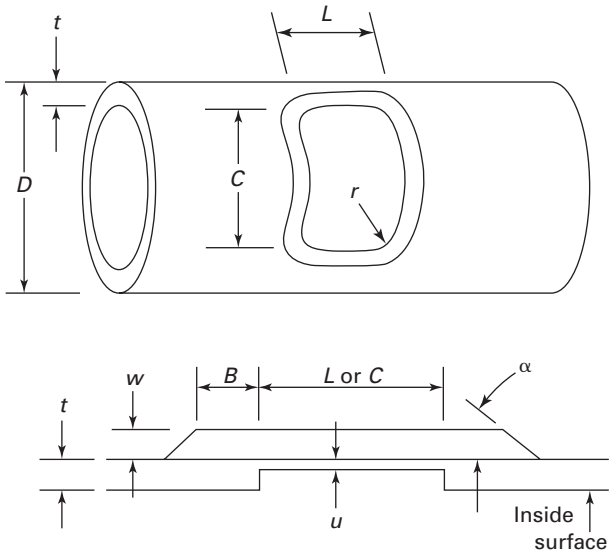

2.4 Operation in Creep Temperature Range

Overlay repairs of components that are operated at or near the creep temperature range should only be qualified through an *engineered design* approach as described in section 3 of this Article.

2.5 Blocked-in Liquid-Filled Components

Blocked-in liquid-filled components should not be repaired due to the potential for pressure increase from thermal expansion.

3 DESIGN

Figure 1 depicts the weld overlay dimensions referred to in this section.

3.1 Overlay Design

The weld overlay shall meet the requirements of paras. 3.1.1 through 3.2.2.2.

3.1.1 Weld Metal

3.1.1.1 Chemistry. The nominal chemistry of the deposited weld metal shall match the base material.

3.1.1.2 Tensile Strength. The tensile strength of the deposited weld metal shall be at least equal to or exceed the tensile strength of the base metal to which the weld overlay is applied.

3.1.1.3 Alternative Filler Metals. Alternative filler metals (to those specified above) may be used with appropriate design calculations and fitness for service evaluations.

3.1.2 Overlay Geometry General Requirements

3.1.2.1 Post-repair Examination. The design of the overlay shall not hinder post-repair examinations and evaluations or any preservice examinations.

3.1.2.2 Extension Beyond Base Metal. The weld shall extend, at full thickness, a minimum distance B in each direction beyond the affected base metal (unless otherwise justified by a fitness for service assessment).

$$B = \frac{3}{4}\sqrt{Rt_{\text{nom}}}$$

where

R = outer radius of the component, or $\frac{1}{2}D$
t_{nom} = nominal wall thickness of the component

3.1.2.3 Edge Taper. The edges of the weld overlay shall be tapered to the existing pressure component surface at a maximum angle, α, of 45 deg.

3.1.2.4 Life of Repair. The thickness shall be sufficient to maintain the predicted life of the repair.

3.1.2.5 Corner Radius. All corners of the overlay shall have a radius, r, not less than the overlay thickness.

3.1.2.6 Corrosion Allowance. Any corrosion allowance that is determined to be necessary shall be added to these dimensions. The predicted maximum degradation of the overlaid pressure component, and the overlay, over the design life of the restoration shall be analyzed.

3.1.2.7 Spacing. In addition, two or more overlays shall not be spaced any closer than $\frac{3}{4}\sqrt{Rt_{\text{nom}}}$ between the toe of each overlay.

3.1.2.8 Thickness. The thickness of the completed overlay, dimension w in Fig. 1, shall not exceed the nominal thickness of the pressure component.

3.1.2.9 Other Configurations. Configurations not meeting the requirements of paras. 3.1.1 and 3.1.2 shall be evaluated based on engineering analysis (para. 3.1.3.2) or testing (para. 3.1.3.3).

3.1.3 Overlay Qualification Requirements. The design of the weld overlay shall meet one of the following:

(a) guidelines for prequalified design in para. 3.1.3.1
(b) guidelines for engineered design in para. 3.1.3.2
(c) guidelines for proof (burst) test in para. 3.1.3.3

3.1.3.1 Prequalified Design. Application of weld overlays on straight piping sections and associated welds to correct limited degradation may be considered a *prequalified design* and shall be exempt from an engineered design qualification or a proof test qualification if all of the following conditions are met:

(a) All of the requirements of paras. 3.1.1 and 3.1.2 are met.

(b) The maximum design temperature does not exceed 340°C (650°F).

(c) The specified nominal thickness of the existing base metal is at least Schedule 40 or Standard Wall, whichever is less.

(d) The maximum angle of the taper does not exceed 30 deg (α in Fig. 1).

(e) The finished overlay is circular, oval, full circumferential, or rectangular in shape.

(f) For each repair, the maximum dimension (L, length along axis) compensated by a circular, oval, or rectangular overlay does not exceed the lesser of one-half the nominal outside diameter of the pressure component or 200 mm (8 in.).

(g) Rectangular overlays are aligned parallel with or perpendicular to the axis of the pressure component, and corners are rounded with radii not less than the overlay thickness.

(h) Oval overlays shall have end radii not less than $\frac{3}{4}\sqrt{Rt_{\text{nom}}}$ and the axis of the overlay shall be aligned parallel with or perpendicular to the axis of the component.

(i) The minimum thickness of the overlay shall be sufficient to restore the nominal wall thickness of the pressure component. This can be accomplished by subtracting the remaining thickness from the nominal thickness of the component to obtain the required overlay thickness.

(j) The thickness of the overlay shall be relatively uniform except for the tapered edges.

(k) If flexibility analysis was required by the original code of construction, the effect of the weld overlay shall be reconciled with the original analysis or qualified in accordance with para. 3.1.3.2.

3.1.3.2 Engineered Design. The weld overlay may be qualified by an *engineered design*. The allowable stress values of the base metal shall apply to the design of the weld metal and the following factors shall be considered in the design:

(a) the effects of three-dimensional shrinkage
(b) the effects of flexibility, stress concentration, and section properties
(c) stress concentrations from the pressure component internal surface configuration

(d) the effects of differing thermal expansion coefficients between the base and the weld metal

(e) the effects of differing thermal mass of the overlay repair

(f) the potential for creep degradation for service temperatures above 340°C (650°F)

3.1.3.3 Proof Test Qualification. As an alternative to the prequalified design or engineered design, a *proof test qualification* may be performed through a satisfactory burst test mock-up. The details of the mock-up configuration and considerations are in para. 3.2.

3.2 Burst Test Procedures

3.2.1 Proof Test Qualification Requirements. As an alternative to the *engineered design* approach, a burst test of a mock-up overlay may be performed to qualify a weld overlay design.

3.2.1.1 General Requirements. A satisfactory mock-up burst test may be used to qualify the weld overlay design for application in the same orientation on the same type of item, and the same location on fittings, when the following conditions are met:

(a) The base metal is of the same P-No. and Group number as the mock-up base material tested.

(b) The specified minimum tensile strength of the item does not exceed that of the mock-up base material tested.

(c) The average thickness of the overlay area(s) is at least the thickness of the mock-up plug, u, in Fig. 1.

(d) The overlap on the full thickness of base metal, B, is at least that of the mock-up.

(e) The transition angle at the outer edges of the overlay, α, is not greater than that of the mock-up.

(f) The overlay surface is similar to or smoother than that tested.

(g) The maximum axial dimension/diameter ratio, L/D, is not more than that tested.

(h) The maximum circumferential dimension/diameter ratio, C/D, is not more than that tested.

(i) The nominal diameter is not less than one-half or more than 2 times the diameter of mock-up tested.

(j) The nominal thickness/diameter ratio, t/D, is not less than one-half or more than 3 times the t/D ratio tested.

3.2.1.2 Simulation of Thin Area. To simulate the area of wall-thinning for pressure testing, a rounded-corner segment of the base material of the mock-up shall be removed to represent the maximum size ratio (axial dimension of L and circumferential dimension of C) and location of thinning or pitting to be compensated for by the weld overlay. A plug of the same base material and of uniform thickness, u, not exceeding the smallest average thickness on which the overlays will be permanently applied, shall be full-penetration welded around the opening and flush with the outside surface of the pressure component. Alternatively, an equivalent volume of base metal may be removed from the inside surface of the mock-up by machining or grinding, without the need for welding in a closure plug.

3.2.1.3 Overlay Thickness. Overlay section thickness (deposit + base metal), represented by the dimension u and w in Fig. 1, for the thinned area of the mock-up shall be not greater than 87.5% of the nominal wall thickness. This is intended to provide a conservative thickness for the qualification of the overlay design.

3.2.1.4 Burst Pressure. To qualify a repair design for general application (on pressure components in the same orientation or at the same location on fittings), burst pressure shall be not less than:

$$P = \frac{2\,t\,S_{act}}{D}$$

where

D = outside diameter of the pressure component, mm (in.)

P = minimum acceptable burst pressure, MPa (psi)

S_{act} = reported actual tensile strength, MPa (psi), of the base material tested

t = minimum specified thickness (excluding manufacturing tolerance) of base material tested, mm (in.)

3.2.1.5 Flexibility Analysis. If flexibility analysis was required by the original code of construction, the effect of the weld overlay shall be reconciled with the original analysis or qualified in accordance with para. 3.1.3.2.

3.2.2 Burst Testing Method

WARNING: Hydrostatic burst testing has the potential to cause loss of life and damage to property. All tests shall be thoroughly evaluated for safety and control of debris from component failure.

3.2.2.1 Pump Selection. The pump station used for burst testing should be capable of exceeding the maximum calculated burst pressure. The pump should be capable of providing a minimum of 25% overpressure to allow for burst pressure variations from wall thickness tolerances, weld reinforcement, etc. In most cases, the actual burst pressure will exceed the calculated value by a small margin.

3.2.2.2 Burst Test Fittings and Gages. All fittings, hoses, and gages shall be rated for a working pressure equal to or greater than the pump rating. Fittings attached to the pressure component mock-up should be threaded into the end bells of the mock-up and then seal welded to prevent leakage. Gages shall be rated for working pressures at or above the pump pressure rating

and shall be calibrated to a pressure standard, traceable to the National Institute of Standards and Testing (NIST), or equivalent, by a reputable laboratory. The expected burst pressure of the component being tested shall fall within one-fourth to two-thirds of the gage rating, so as to be in the most accurate portion of the gage measurement range.

4 FABRICATION

This section describes application methods and techniques for applying weld overlays on degraded or thinning steel pressure components. This section should be considered as general requirements for overlaying and shall be used in conjunction with the requirements of the applicable code of construction or post-construction code.

4.1 Prerepair Inspection Requirements

4.1.1 Evaluation of Base Material. The material beneath the surface to be weld overlaid shall be evaluated to establish the average wall thickness and the extent and configuration of thinning to be reinforced by the weld overlay. Consideration should also be given to the cause and rate of deterioration. (If the cause of the thinning is not known or understood, then a materials engineer should be consulted to approve the repair techniques and procedures to ensure that the repair will not cause an unacceptable change in the deterioration mechanism.)

4.1.2 Volumetric Examination. The user shall determine that cracking has not occurred prior to commencing the repair. The area of the existing pressure component, to which the weld overlay is to be applied, should be volumetrically examined prior to performing the weld overlay.

4.1.3 Surface Examination. The entire surface, to which the weld overlay is to be applied, shall be examined using appropriate NDE technique(s) to verify surface quality prior to welding. Acceptance criteria shall be in accordance with the applicable code of construction or post-construction code.

4.2 Prerepair Surface Preparation

4.2.1 General. The surface to be overlaid shall be free from rust, scale, paint, coatings, or other contaminants. Grinding or wire brushing may be necessary to remove surface oxides or protective coatings.

4.2.2 Solvent Cleaning. Immediately prior to welding, the final weld surface should be thoroughly cleaned using a solvent, such as acetone, to remove any traces of oil or grease. This procedure will also help in removing traces of moisture. Surface contaminants may lead to porosity and other welding defects, which may adversely affect the welding quality. A clean surface will also assist in permitting more accurate nondestructive examination assessment of the pressure component wall degradation.

4.2.3 Leakage Repair. All leakage shall be repaired prior to performing the weld overlay repair. If sufficient material is available, peening may be used to close off the leakage and permit seal welding. Another option is application of a series of overlapping weld beads immediately adjacent to the leakage. Once sufficient material is available, peen to close off the leakage and perform final seal welding.

4.2.4 Special Considerations. Seal welded repairs conducted on-line, or to systems containing hazardous materials, may require special considerations that are outside the scope of this Article.

4.3 Weld Overlay Placement

4.3.1 Mapping of Degraded Area. The area that is determined to be degraded below the allowable wall thickness should be clearly mapped-out on the pressure component surface, using a scribe or other suitable marking technique.

4.4 Electrode Size and Filler

4.4.1 Weld Metal Requirements. The required weld metal shall conform to para. 3.1.1.

4.4.2 Wall Thickness Determination. Prior to initiation of welding, the remaining wall thickness shall be determined to ensure that the proper electrode size is used to prevent burn-through of the pressure component wall.

4.4.3 Minimizing Penetration. It is necessary to minimize penetration during the first layer, thus smaller diameter electrodes should be used. If in doubt about the accuracy of the wall thickness, such as in the case of pitting, the smallest possible electrode should be selected.

4.4.4 Electrode Size. The electrode size should not exceed the remaining base material wall thickness.

4.4.5 Burn-Through. The potential for burn-through and consequences thereof, shall be evaluated.

4.5 Welding Process and Techniques

4.5.1 Welding Procedure Qualification. Overlay welding shall be performed using a qualified groove welding procedure, in accordance with ASME BPVC Section IX, or as required by the applicable code of construction or post-construction code.

4.5.2 Welder Qualification. Welders performing overlay welds shall be qualified in accordance with ASME BPVC Section IX, or as required by the applicable code of construction or post-construction code.

4.5.3 Welding Processes. Typical welding processes for these repairs include, but are not limited to, SMAW and GTAW.

4.5.4 Wall Thickness Considerations. Pressure components with wall thickness less than the diameter of the electrode should be depressurized before welding.

4.5.5 Depressurization. Consideration should be given to depressurizing the system before welding. Alternatively, appropriate in-service welding techniques (e.g., as provided in API RP 2201) should be used.

4.5.6 Heat Treatment. Heat treatment shall be performed in accordance with the applicable code of construction, post-construction code, or engineering design. Heat treatments shall only be applied to equipment that is repaired while not in service. In some cases, heat treatment may be required to meet service conditions or process and may not be required by code of construction (e.g., for H_2S cracking).

4.5.7 Temper Bead Technique. Temper bead techniques, as permitted in the applicable post-construction codes, may be used on carbon steel or low alloy steel to avoid the need for high temperature heat treatments. Avoid use of temper bead methods where process or service conditions mandate use of heat treatment (e.g., H_2S, HCN, HF).

4.5.8 Bead Overlap. A bead overlap of approximately 50% should be maintained to reduce the potential for burn-through and to assist in obtaining proper bead placement. In some cases, wastage may have progressed to the point where there is risk of burning through the component when depositing the first layer(s). To prevent burn-through in such situations, the first bead should be deposited where the remaining thickness is greater, then subsequent beads should be overlapped to step across the thinner area.

4.5.9 Welding Techniques. The techniques specified in paras. 4.5.9.1 through 4.5.9.4 may be used.

4.5.9.1 Considerations Prior to Welding. Once the area to be repaired has been mapped and the pressure component surface cleaned, welding may be initiated on the first layer. Welding parameters should provide as low of a heat input as possible while maintaining fusion. This not only reduces the potential for burn-through but also reduces the width of the finished heat-affected zone.

4.5.9.2 Initial Welding Pass. The first weld pass(es) should follow the outer perimeter of the weld overlay location to

(a) provide an outer gage for the welder

(b) improve the heat-affected zone quality by eliminating the potential for a final, untempered weld pass on the base metal surface for carbon and low alloy steel materials. After completion of the perimeter weld pass, the first layer may be welded in accordance with the qualified weld procedure.

4.5.9.3 Subsequent Welding Passes. Subsequent welding passes may be completed in a normal fashion; however, care should be taken with the weld passes at the edges of the overlay to maintain the edge angle, or taper, to equal or less than that qualified. An edge angle of 30 deg is recommended and meets one of the provisions for a prequalified design. The taper angle is important as it minimizes the stress intensifying effect of the overlay due to the changes in surface geometry.

4.5.9.4 Edge Taper Angle. The maximum allowable edge taper angle is 45 deg.

5 EXAMINATION

The inspections specified in paras. 5.1 through 5.4 apply to weld overlay repairs.

5.1 Surface Examination

The completed weld overlay shall be examined using the liquid penetrant or magnetic particle method and shall satisfy the surface examination acceptance criteria of the applicable code of construction or post-construction code.

5.2 Overlay Thickness

Adequate wall thickness of weld overlay and relevant existing base metal shall be verified by ultrasonic thickness measurement.

5.3 Volumetric Examination

When volumetric examination is required by the applicable code of construction or post-construction code, the full volume of the finished overlay, excluding the tapered edges, but including the volume of base metal required for the design life of the overlay, shall be examined by either the ultrasonic or radiographic method. The repair shall satisfy the acceptance criteria for girth welds of the applicable code of construction or post-construction code, if there are no acceptance criteria for structural overlays, butters, or cladding.

5.4 Surface Finish

Grinding and machining of the as-welded overlay surface may be used to improve the surface finish for such examinations, provided the overlay thickness is not reduced below design requirements.

6 TESTING

6.1 Pressure Testing

If the pressure component can be isolated for pressure testing, all repair locations shall be pressure tested if

required by the applicable post-construction code. Special safety precautions shall be taken when performing pneumatic testing to minimize the risk of brittle fracture.

6.2 Volumetric Examination in Place of Pressure Testing

Volumetric nondestructive examination may be performed in place of pressure testing, when pressure testing is not practical. Leak testing may be required to satisfy post-construction code requirements.

6.3 Insulation and Coating

All testing and examinations shall be performed prior to application of insulation or coatings.

7 REFERENCES

API 510, Pressure Vessel Inspection Code: Maintenance Inspection, Rating, Repair, and Alteration

API 570, Piping Inspection Code: Inspection, Repair, Alteration, and Rerating of In-Service Piping Systems

API RP 2201, Safe Hot Tapping Practices in the Petroleum & Petrochemical Industries

Publisher: American Petroleum Institute (API), 1220 L Street, NW, Washington, DC 20005-4070

ASME Boiler and Pressure Vessel Code, Section IX — Welding and Brazing Qualifications

Publisher: The American Society of Mechanical Engineers (ASME), Three Park Avenue, New York, NY 10016-5990; Order Department: 22 Law Drive, P.O. Box 2300, Fairfield, NJ 07007-2300

National Board Inspection Code, NB-23

Publisher: The National Board of Boiler and Pressure Vessel Inspectors (NBBI), 1055 Crupper Avenue, Columbus, OH 43229

Article 2.3
Seal-Welded Threaded Connections and Seal Weld Repairs

1 DESCRIPTION

1.1 Introduction

Where piping systems, pressure vessels, and process equipment are assembled by threaded connections, the mechanical seal of standard tapered pipe threads may be sufficient for many industrial applications. However, some systems handling fluids at high temperatures or high pressures; fluids that are flammable, toxic, or reactive; or fluids requiring very low leak rates, may not rely solely on threaded joints for leak tightness.

1.2 Seal Welds

When the convenience of a threaded connection is desired, and the reliable seal of a welded connection is required, a seal-welded threaded joint is sometimes used. Seal welds are applied after the threads are engaged. The mechanical strength of the joint is provided by the threads, while the seal weld provides leak tightness.

1.3 How Seal Welds Are Used

Seal welds are used in two different ways. Some are installed in new construction, as part of the original design. Other seal welds are used after construction, as a maintenance procedure to seal threaded connections that have leaked. Finally, older plants may have threaded connections that were permitted in past specifications but need to be upgraded today by seal welding as part of an integrity management program.

2 LIMITATIONS

2.1 Additional Requirements

Part 1 of this Standard contains additional requirements and limitations. This Article shall be used in conjunction with Part 1.

2.2 Special Considerations Outside of Scope

Seal-welded repairs conducted on-line, or to systems containing hazardous materials, may require special considerations that are outside the scope of this Article.

2.3 Consideration of Hazards

Before seal welding an existing threaded connection, consideration should be given to the potential hazard of the existing system, the ability to isolate the connection while the plant is still running, personnel exposure to the system contents, and the consequences of an unscheduled plant shutdown. Also, without attention to the details and QA/QC requirements in this Article, seal-welded threaded connections are prone to cracking and leakage. Upon careful evaluation of these considerations, it may be concluded that a more appropriate action is to replace the component(s) containing the threaded connections.

2.4 Potential Contaminants

For repair of leaking threaded connections, the original thread sealant compound, thread lubricant, and process fluid contamination can make seal welding difficult and result in cracking of welds.

2.5 Welding and Material Considerations

For all seal welds, careful evaluation of the joint is needed. Some threaded connections are made of materials that are difficult to weld, such as cast iron. Joints may require high preheat, stainless or chrome-moly welding fillers, or other special welding requirements, based on the materials of construction and service.

2.6 Removal of Coatings

It is essential that coatings, including zinc galvanizing, be removed from the weld zone before welding. Recoating the joint area, after welding and testing are complete, shall be considered.

2.7 Welding Effect on Adjacent Components

In seal welding of threaded connections, consideration shall be given to the possible damaging effects of welding on adjacent components, such as soft seats in threaded valves.

3 DESIGN

3.1 Applicable Codes

For repair of original seal welds, consult the original code of construction, or applicable post-construction code. The requirements specified in paras. 3.1(a) and 3.1(b) are from the ASME BPVC Section I, ASME B31.1, and ASME B31.3, but may be successfully used on any seal-welded joint repair.

(a) The seal weld shall only be used to provide the hermetic seal, not the mechanical strength to the joint.

(b) All of the remaining exposed threads (if any) shall be completely covered with weld metal.

3.2 Application to Existing Joints

For repair of leaking threaded connections that are not originally seal welded, it may not be possible to meet the conditions of para. 3.1(a) or 3.1(b). Seal welds applied over existing threaded joints may be less reliable than new construction, so the user must evaluate the safety and reliability of each application individually.

3.3 Joint Reassembly

If the joint is disassembled, it shall be reassembled without the use of any tape, lubricants, or joint compound.

3.4 Two Pass Welds

The use of two pass welds over all exposed threads shall be considered. Two pass welds increase the reliability of the joint.

4 FABRICATION

4.1 Cleaning

Remove the system from service, and drain the process fluid. Make the system safe for hot work. This may be done by purging with steam, nitrogen, or other inert gas.

4.2 Cleaning of Joints

Prior to seal welding, joints shall be cleaned to remove all surface contamination.

4.3 Welding Qualifications

Welders and welding procedures shall be qualified per ASME BPVC Section IX, or other applicable code of construction or post-construction code.

4.4 Fatigue Considerations

For connections subject to vibration or fatigue, consideration shall be given to removal by grinding of all exposed threads prior to seal welding.

4.5 Prior Seal Welded Joints

For repair or replacement of original seal welds

(a) if installing replacement pipe or fittings, do not use thread sealant compound or lubricant

(b) for repair without disassembly, the integrity of the old seal weld should be inspected visually to determine if it should be completely removed

4.6 Welding Existing Connections Without Disassembly

For seal welding original threaded connections without disassembly

(a) remove as much old thread sealing joint compound as possible. A wire brush, grinder, or torch may be needed.

(b) expect the likelihood of porosity in the first pass, caused by burning joint compound or trapped fluid

(c) grind out any porosity or other defects and reweld. Repeat as necessary until weld is leak tight.

5 EXAMINATION

5.1 Techniques and Methodology

Visual examination (VT) is the most common examination technique used for thread seal welds. Magnetic particle examination (MT) or liquid penetrant examination (PT) may be required by the applicable code, or may be used to provide greater assurance of leak tightness. The methodology shall be in accordance with the applicable code of construction or post-construction code.

6 TESTING

6.1 Initial Service Testing

For most applications, an initial service leak test, in which the joints are examined for leakage when the system is returned to service, is sufficient. Where the possibility of leakage during an initial service leak test is unacceptable, additional NDE, or a hydrostatic or pneumatic leak test should be performed prior to placing the system in service.

6.2 Leak Testing

If greater assurance of leak tightness is required prior to service, a preservice leak test may be used. Options include bubble testing, pneumatic testing, and hydrostatic testing.

NOTE: The user is cautioned to consider any hazards that might be associated with the test medium (e.g., toxicity, flammability, reactivity, explosibility), pressure level of fluid, and coincident stress level/temperature of the components.

7 REFERENCES

ASME Boiler and Pressure Vessel Code, 2004 Edition, Section I — Power Boilers; Section IX — Welding and Brazing Qualifications

ASME B31.1, Power Piping

ASME B31.3, Process Piping

Publisher: The American Society of Mechanical Engineers (ASME), Three Park Avenue, New York, NY 10016-5990; Order Department: 22 Law Drive, P.O. Box 2300, Fairfield, NJ 07007-2300

Article 2.4
Welded Leak Box Repair

1 DESCRIPTION

(a) A welded leak box consists of an enclosure used to seal off or reinforce a component. An example of a leak box is illustrated in Fig. 1.

(b) Leak boxes are commonly used to seal repair-leaking components or reinforce damaged components.

(c) Leak repair boxes can have a variety of shapes (e.g., cylindrical, rectangular, with either flat or formed heads), often following the contour of the pipe or component being repaired. Leak repair boxes can also be used to enclose components such as flanges and valves or fittings, branches, nozzles or vents and drains.

(d) Leak repair boxes are typically custom-made by welding split pipe, pipe caps, or plates.

(e) The annular space between the leak repair box and the repaired component can be left empty, or filled or lined with epoxy, sealant, fiber, refractory materials, or other compounds.

(f) A leak box can be nonstructural (designed to contain leaks) or structural (designed to reinforce and hold together a damaged component).

2 LIMITATIONS

2.1 General

Part 1 of this Standard, Scope, Organization, and Intent, contains additional requirements and limitations. This Article shall be used in conjunction with Part 1.

2.2 Crack Repair

Normally, leak boxes are used to contain leaks at packings, and at flange and gasketed joints, or to contain leaks (or potential leaks) due to local thinning. Since the leak box may not prevent the propagation of a crack in the pipe or component, leak repair boxes shall not be used when cracks are present, unless

(a) the conditions that led to the crack formation and propagation have been eliminated so that the crack will not grow during the planned life of the repair;

(b) a fitness-for-service assessment shows that the crack growth during the planned life is acceptable, and that the crack will not propagate across the leak repair box closure weld;

Fig. 1 Example of a Welded Leak Box Repair of a Tee

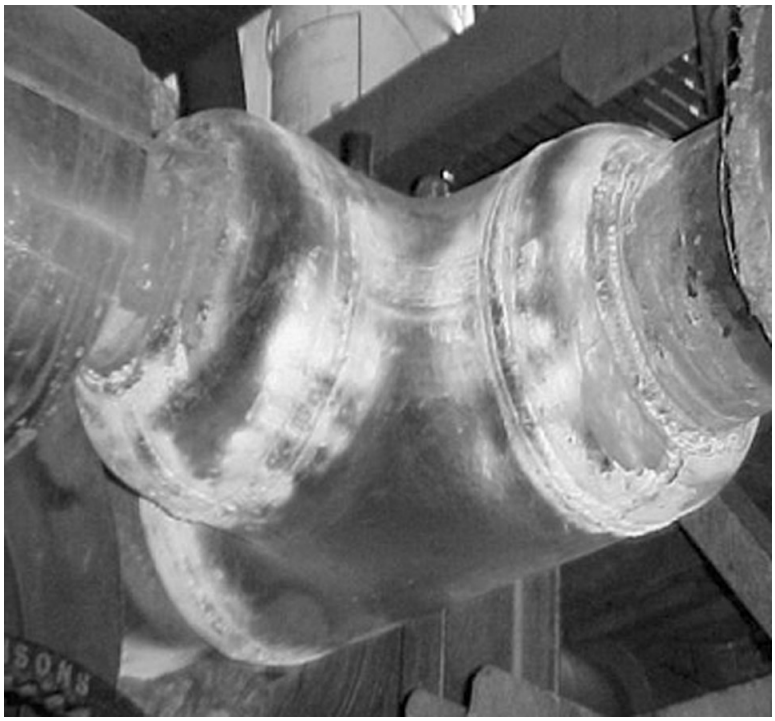

(c) the crack is circumferential and the repair is a structural leak box, where the leak box and its welds are designed for the case of full circumferential break of the pipe, or separation of the cracked component; or

(d) the leak box fully encapsulates a cracked vent or drain.

2.3 Qualifications

Installation, welding and sealant injection, where necessary, shall be performed by personnel qualified under conditions representative of the field application.

2.4 Safety

Personnel shall be aware of hazards in welding on degraded components, and shall take the necessary precautions to avoid unacceptable risks.

(a) A hazard review should be undertaken prior to starting the work to address all credible problems that could arise.

(b) If the component is leaking or has the potential to leak during installation, and if the contents are hazardous, additional precautions should be taken and they should be addressed during the prejob hazard review meeting (e.g., need for fresh air suit, etc.).

3 DESIGN

3.1 Materials

Materials for the leak box shall be listed in the construction or post-construction code, and be compatible with the fluid, pressure, and temperature, with due consideration for the stagnant condition created by a leak of fluid into the box. Generally, the material of construction of the leak box should be similar to the repaired component and weldable to the existing pressure boundary. The leak box design and construction, including material selection, shall be done considering the deterioration mode that led to the need for the repair. The leak box shall be suitable for resisting this deterioration mode for the life of the repair.

3.2 Design Life

The design life of the repair shall be based on the remaining strength of the repaired component, the corrosion resistance, and mechanical properties of the leak box and welds.

3.3 Failure Modes

The box design shall consider the potential introduction of new failure modes in the boxed component. For example:

(a) External parts of the repaired component, now enclosed by the box, such as flange bolts, can significantly degrade, crack, or corrode if in contact with the leaking fluid.

(b) Because the leak repair box can be at a lower temperature than the component, condensation of leakage gases can create corrosive effects.

(c) The box can modify the temperature of the component and lead to higher corrosion rate, or cause dew point corrosion.

(d) Temperature of encapsulated bolting can increase and bolting can yield, as a result of the contact with the process fluid or the insulating effect of the box.

(e) The development of operating and residual stresses due to constrained differential expansion.

3.4 Temperature and Toughness

The leak box materials shall satisfy the minimum temperature and, where applicable, minimum toughness requirements of the applicable code of construction or post-construction code.

3.5 Design Conditions

Leak repair boxes and attachment welds shall be designed for design conditions and anticipated transient loads imposed on the repaired pipe or component, following the design requirements of the construction or post-construction code.

3.6 Qualification

In cases where there are no applicable design requirements, the principles of the applicable code of construction or post-construction code shall be followed. Components of the leak repair box that are fabricated by machining standard fittings (such as cutting-out an opening in standard pipe caps to make end pieces) shall be qualified by analysis or testing, as provided in the applicable code of construction or post-construction code, and be reinforced if necessary.

The leak repair box shall not be welded to the knuckle region of end caps or formed heads unless the design is qualified by analysis or proof testing, including consideration of fatigue cycling.

3.7 Corrosion Allowance

The design of the leak box shall include the applicable corrosion allowance, consistent with the service and the design life of the repair.

3.8 Design Loads

The design of the welded leak box for normal operating conditions shall consider

(a) the coincident maximum and minimum pressures and temperatures of the system, unless means are provided to limit the pressure in the leak repair box. Designing the box for a lower range of design and operating temperatures than the component may be acceptable if justified by heat transfer analysis.

The weld joint efficiency factor assigned in designing the leak box shall be consistent with the type and extent of weld examinations.

(b) the load imposed by the weight of the leak repair box, including the entrapped leaking fluid and annular space material.

(c) the effects of expansion, including differential expansion or contraction, and the effect on the flexibility of the pipe or component. On insulated lines and components the leak box may also be insulated to minimize differential expansion.

3.9 Transient Loads

The design of the welded leak box for anticipated transient loads shall consider

(a) thrust loads, in case of full circumferential separation of the pipe or component. Design for the axial thrust resulting from full circumferential separation may be waived, provided the calculated remaining strength of the degraded component at the end of the design life (including expected continuing degradation in service) is determined to be sufficient. Additional restraints may be added to the pipe or component to reduce the loads on the leak box.

(b) wind, earthquake, or fluid transients (fluid hammer or liquid slug), as applicable.

(c) other applicable design conditions.

3.10 Vents and Drains

(a) When repairing a leaking component, the leak box assembly should be designed with vents and drains to permit venting the leak while assembling the box, then draining the annulus as necessary.

(b) The vent or drain should include a threaded cap, a flange, or a valve that will be opened during welding to preclude internal pressure buildup, and closed after welding, inspection, and testing. This same vent or drain may be used to vent or drain the leak repair box in the future.

(c) If leak sealant material is to be injected into the leak repair box, these vent and drain connections may be used, or separate injections may be provided.

3.11 Sound Metal

The leak box shall be sufficiently long to extend to a sound area of the repaired component. The component to be repaired shall be examined to ensure that there is sufficient wall thickness at the weld locations to avoid burn-through during welding of the box to the component.

3.12 Sealant Pressure

If using sealant injection, the possibility of inward collapse of the repaired component due to the annulus pressure of the injected sealant shall be considered.

Consideration should be given to off-gassing of sealant compounds as they cure.

3.13 Sealant Seepage

If using sealant injection, the possibility and consequence of sealant seeping into the damaged component shall be considered.

3.14 Joints

Leak boxes over expansion joints, slip joints, ball joints, etc., are special cases that shall require analysis of the loads in the pipe system, anchors, and component nozzles with the box installed, with due consideration for thermal-induced movements in operating and shutdown conditions.

4 FABRICATION

4.1 Preparation

The component to which the box will be welded shall be free of loose corrosion deposits, dirt, paint, insulation, mastics, and other coatings in the vicinity of the box-to-component welds.

4.2 Leak Box Installation

(a) If the leak box is too large to be lifted by hand, lifting devices may be necessary.

(b) During installation, care shall be taken so as not to damage the box, especially the weld bevels.

(c) For small leaks, the leak box may be placed directly over the leak. Larger or higher pressure installations may require the leak box be assembled on the component to the side of the leak and then slid and welded over the leak.

4.3 Welding

The weld procedure and welder shall be qualified to perform the repair under the applicable code of construction or post-construction code.

4.4 In-Service Welding

The leak repair box may be installed and welded to the component when out of service or, with the necessary safety procedures, in service. For welding in service, the weld procedure qualification shall properly address preheat temperature, weld cooling rate, the risk of burn-through and the effect of the welding temperature on the strength of the metal under service conditions.

4.5 Leaking Component

If the component is leaking prior to repair, consideration should be given to stopping the leak prior to welding the leak box.

4.6 Heat Treatment

Preweld and postweld heat treatment shall conform to the applicable code of construction or post-construction code, unless deviations are justified by a fitness for service analysis. Based on the service conditions, the need

for preweld and postweld heat treatment beyond the requirements of the applicable code of construction or post-construction code should be considered.

5 EXAMINATION

5.1 Qualifications

NDE personnel, examination procedures, and acceptance criteria shall be in accordance with the applicable code of construction or post-construction code, except as noted in paras. 5.2 and 5.3, and be consistent with the joint efficiency or joint quality factors used in design.

5.2 NDE Exemptions

NDE confirmation of full penetration of welds may be omitted if justified for the service conditions, such as in case of

(a) low-calculated stresses for normal and anticipated transient loads; for example, below half the design allowable stress at operating temperature

(b) where there is a low risk of crevice corrosion at the box-to-component weld joint

5.3 Surface Examination

Welds that cannot be examined by radiographic or ultrasonic methods because of weld geometry should be examined by liquid penetrant or magnetic particle methods, and the joint efficiency factor assigned in design of the leak box shall be consistent with the method and extent of examination.

5.4 Evaluation

Results of examinations should be evaluated following the criteria of the applicable code of construction or post-construction code.

6 TESTING

6.1 Test Pressure

The designer shall determine the type of pressure or leak test to be conducted after installation, on the basis of risk (likelihood and consequence) of failure of the repaired component when pressurizing the annulus between the box and the component.

6.2 Test Method

The test may consist of one of the following:

(a) an in-service leak test (if the consequence of an in-service leak out of the box is acceptable)

(b) a hydrostatic test if there is no risk of overheating the test water above flashing temperature at atmospheric pressure

(c) a pneumatic pressure test

(d) a sensitive leak test (such as air with bubble solution, or helium leak test)

6.3 External Pressure

The potential for external pressure collapse of the carrier pipe during the test should be considered in specifying the test pressure.

Article 2.5
Welded Lip Seals

(In the course of preparation.)

Article 2.6
Full Encirclement Steel Reinforcing Sleeves for Piping

1 DESCRIPTION

This Article applies to the design and installation of full-encirclement welded steel sleeves for piping or pipelines. The sleeves can be designed for nonpressure containing reinforcement or for pressure containing reinforcement. Full encirclement reinforcement sleeves have proven effective in the repair of a wide variety of internal and external defects.

1.1 Full Encirclement Steel Sleeve

Full encirclement steel sleeves consist of a cylindrical shell placed around the pipe section to be repaired and welded along the two longitudinal seams, as illustrated in Figs. 1 and 2. There are two types of sleeves, herein referred to as "Type A" and "Type B." Sleeves can be made from pipe or rolled plate material.

1.1.1 Type A Sleeve. Type A sleeve ends are not welded circumferentially to the carrier pipe, as shown in Fig. 1. The Type A sleeve is not capable of containing internal pressure but functions as reinforcement for a defective area. It is only used for the repair of defects that are not leaking and that are not expected to grow during service, or when the damage mechanism and growth rate are fully understood.

1.1.2 Type B Sleeve. Type B sleeve ends are welded circumferentially to the carrier pipe, as shown in Fig. 2. A Type B sleeve is capable of containing internal pressure because the ends are fillet welded to the carrier pipe. Type B sleeves can be used to repair leaking defects or defects that may eventually leak and to strengthen pipe having defects that reduce the axial load carrying capability of the pipe.

2 CAUTIONS AND LIMITATIONS

2.1 Additional Requirements

Part 1 of this Standard contains additional requirements and limitations. This Article shall be used in conjunction with Part 1.

2.2 Regulations

The piping and pipeline regulations regarding repair and piping and pipeline design code restrictions regarding repair shall be followed.

2.3 Leaking Defects

For Type B sleeves with leaking defects, special considerations shall be taken to isolate the leak prior to welding.

2.4 Cyclic Operation

If a sleeve repair is applied to a system subjected to frequent pressure cycles, a fatigue evaluation of the component should be in accordance with para. 3.8.

When a Type B sleeve is subject to cyclic through-wall thermal gradients, a fatigue evaluation of the sleeve-to-pipe fillet welds should be conducted to establish the service life of the repair, in accordance with para. 3.8.

2.5 Circumferential Defects

Type A sleeves may not be appropriate for the repair of circumferentially oriented defects because they will not resist axial loads on the pipe.

2.6 Undersleeve Corrosion

For Type A sleeves, measures shall be taken to prevent corrosion due to the migration of moisture through the unwelded ends into the space between the pipe and sleeve. Such measures may include the use of a sealant or coating suitable for the operating environment.

2.7 Weld Reinforcement

The presence of a girth weld or longitudinal seam weld having a prominent weld reinforcement may interfere with achieving a tight fit-up of the sleeve. If it is necessary to remove the weld reinforcement by grinding to achieve a good fit, the weld shall be examined by RT or UT prior to grinding or the pressure shall be reduced. This examination is particularly important when the line is in service. Alternatively, sleeves may be fabricated with a circumferential bulge to bridge the weld, as shown in Fig. 3. The weld root gap shall be uniform along length, including bulge.

2.8 Sleeve Size Requirements

Areas that do not meet Fitness For Service (FFS) criteria should be fully covered by the repair sleeve. For Type B sleeves, the end fillet welds shall only be made in areas where sufficient wall thickness exists to prevent burn-through.

Fig. 1 Type A Sleeve

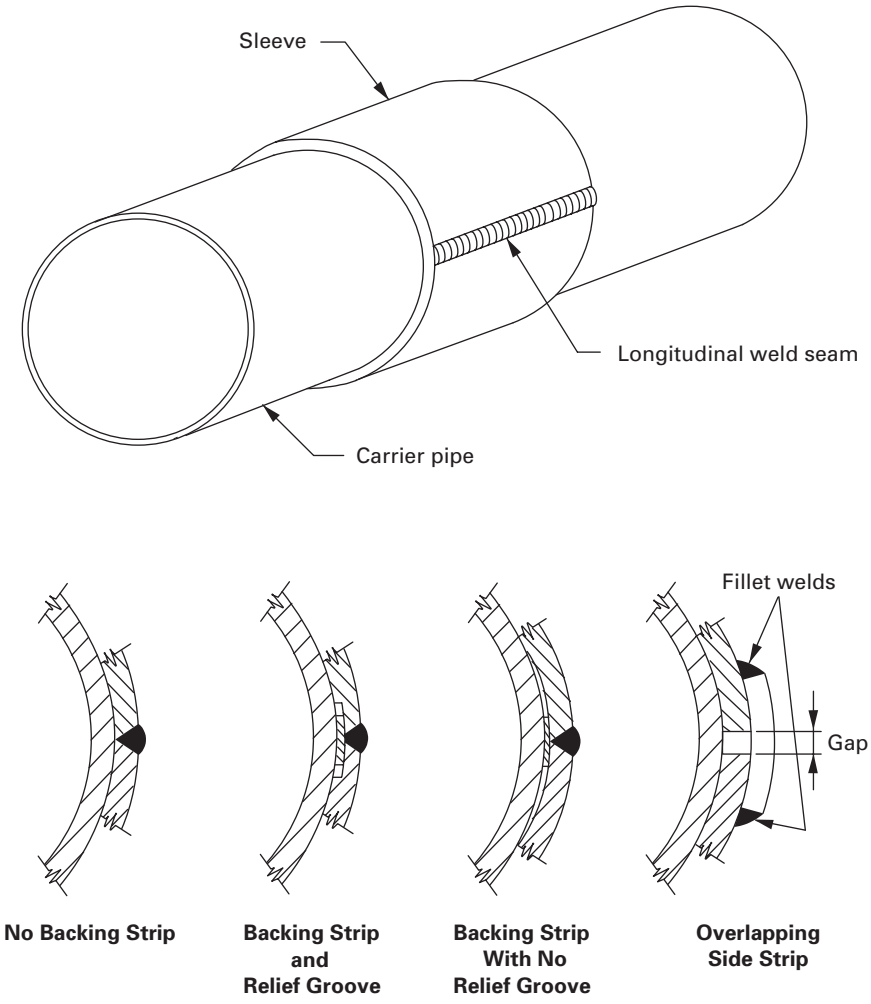

2.9 Welding

Welds shall be installed by qualified welders in accordance with qualified procedures reflecting actual field conditions.

2.10 Weld Filler Metal

If a hardenable filler material is used between the sleeve and carrier pipe, it shall be compatible with the intended application. The material shall be suitable for the service temperature and, for Type B sleeves, compatible with the fluid. Filler material may be applied prior to sleeve installation or pumped in between the sleeve and carrier pipe annulus after the sleeve is in place.

3 DESIGN

3.1 Type A Sleeves

Type A sleeves shall be fabricated or manufactured from steel meeting the material specifications of the construction code, and should have a thickness equal to at least two-thirds the thickness of the carrier pipe. The carrier pipe longitudinal stresses shall meet the requirements of the applicable construction code.

3.2 Type B Sleeves

Type B pressure containing sleeves shall have a wall thickness equal to or greater than the wall thickness required for the maximum allowable design pressure or, if required by the engineering design, the full equivalent strength of the pipe being repaired. For tight-fitting sleeves, the engineering design shall be based on the nominal wall thickness of the carrier pipe. A longitudinal weld joint efficiency factor of 0.8 shall be applied when calculating the required thickness unless the weld is 100% examined by ultrasonic examination, in which case a joint efficiency factor of 1.0 may be applied. If the Type B sleeve is intended to provide axial reinforcement, such as at a defective girth weld, it shall be designed to carry axial and bending loads acting at the sleeve location.

Fig. 2 Type B Sleeve

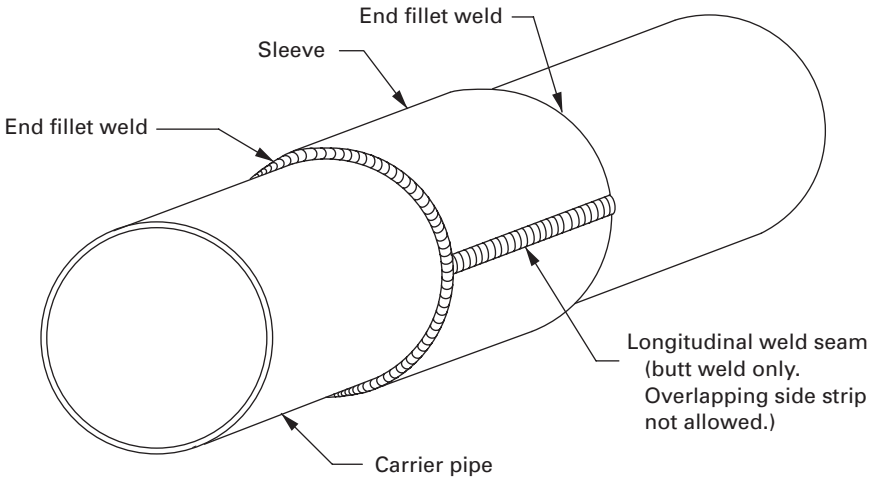

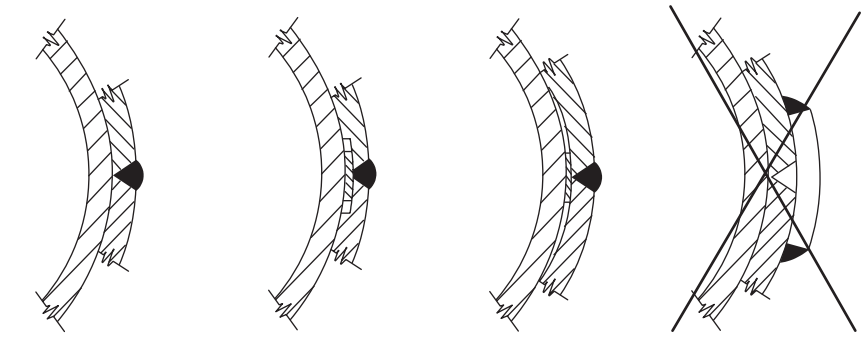

No Backing Strip

Backing Strip and Relief Groove

Backing Strip With No Relief Groove

Overlapping Side Strip (Not Allowed)

Fig. 3 Welded Split Sleeve for Use Over a Girth Weld

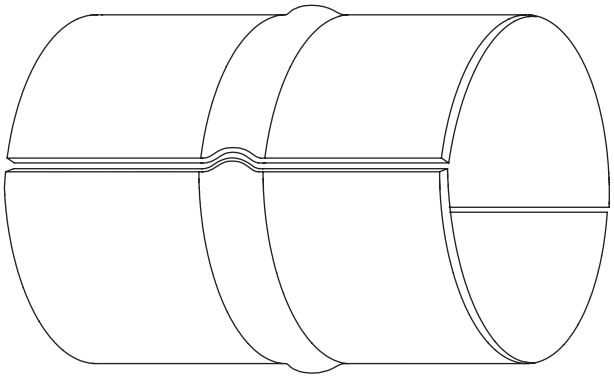

Bulge in Sleeve to Fit Over Existing Circumferential Weld

Fig. 4 Type B Sleeve Fillet Weld Size for Sleeve Thickness Less Than or Equal to 1.4 Times the Carrier Pipe Thickness

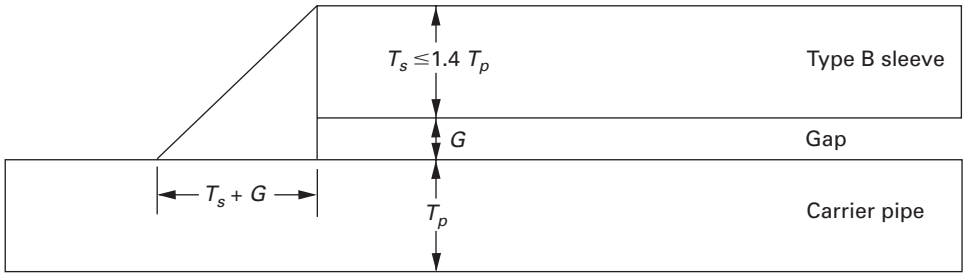

G = gap

T_p = carrier pipe wall thickness

T_s = Type B sleeve wall thickness

3.3 Pressure Design

The pressure design calculations of the applicable construction code shall apply for calculating the required sleeve thickness. Sleeve material and allowable design stress shall comply with the applicable construction code requirements. Corrosion allowances applied shall be in accordance with the engineering design.

3.4 Sleeve Dimensions

Types A and B sleeves shall be at least 100 mm (4 in.) long and extend beyond the defect by at least 50 mm (2 in.).

3.5 Type B Sleeve Fillet Welds

The fillet weld leg size for circumferential end welds for a Type B sleeve shall be as follows:

(a) A complete fillet weld if the sleeve thickness is less than or equal to 1.4 times the nominal carrier pipe wall thickness, as shown in Fig. 4.

(b) If a Type B sleeve is thicker than 1.4 times the nominal carrier pipe wall thickness, the circumferential ends of the Type B sleeve should be chamfered at approximately 45 deg, down to 1.4 times the carrier pipe nominal wall thickness plus the gap spacing, as shown in Fig. 5.

The toe of the weld on the carrier pipe shall smoothly transition from the carrier pipe to weld in order to minimize the level of stress intensification. The included angle between the weld toe and the carrier pipe shall not create a sharp notch, and defects such as undercut are not allowed.

3.6 External Prssure

External pressure loading of the pipe within Type B sleeves should be considered by the engineering design. Fitting the sleeve as tightly as possible to ensure load transfer from the pipe to the sleeve should minimize the annulus volume. If this is not possible, the annulus volume should be filled with hardenable filler material (see para. 2.9) or the pressure should be balanced by hot-tapping the pipe under the sleeve. A vent or drain may be provided in the design. If the annulus is to be left unfilled, it should be verified that the stagnant fluid between the sleeve and the carrier pipe will not cause corrosion.

3.7 External Damage

If external damage is repaired with a Type A or Type B sleeve, the damage shall be filled with a hardenable filler material with compressive strength adequate to transfer the load to the sleeve. The use of a hardenable material should be applied to fill voids or cavities present between the Type B sleeve and the carrier pipe.

3.8 Cyclic Operation

(a) If the system is subjected to greater than 400 pressure cycles, where the change in pressure, during a cycle, exceeds 20% of the design pressure, then a detailed fatigue analysis of the component, considering fit-up of the sleeve to the inner pipe, shall be performed in accordance with API RP 579/ASME FFS-1.

(b) If a Type B sleeve is subjected to changes in temperature where the difference in mean metal temperature between the sleeve and inner pipe is less than 100°F and the number of cycles is less than 200, then a fatigue analysis is not required, otherwise a detailed fatigue evaluation of the component, considering fit-up of the sleeve to the inner pipe, shall be performed in accordance with API RP 579/ASME FFS-1.

3.9 Restraint of Pipe Bulging

Local wall thinning or damage defects, such as dents, weaken the carrier pipe and typically bulge outward prior to failure under increasing pressure. The effectiveness of repair sleeves relies on their capability to restrain the outward bulging of a pipe defect prior to its failure. The design shall consider if it is necessary

Fig. 5 Type B Sleeve Fillet Weld Size for Sleeve Thickness Greater Than 1.4 Times the Carrier Pipe Thickness

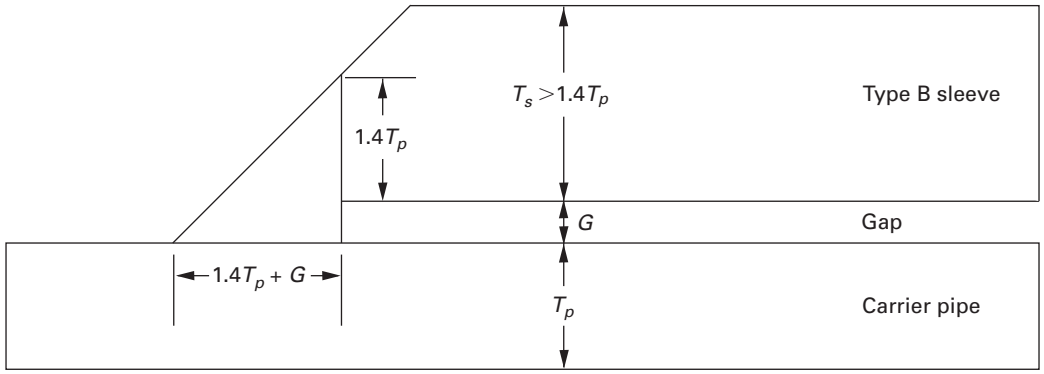

G = gap
T_p = carrier pipe wall thickness
T_s = Type B sleeve wall thickness

(a) to use a hardenable filler material (epoxy or equivalent) under the sleeve to fill the voids when the defect is external

(b) to reduce the line pressure at time of installation

3.10 Type A Sleeve Filler Material

For Type A sleeves, it is necessary to achieve intimate contact between the pipe and the sleeve at the location of the defect being repaired and an appropriate filler material should be used to ensure that the sleeve provides the desired pressure load reinforcement.

3.11 Differential Thermal Expansion

Differential thermal expansion between the carrier pipe and the reinforcing sleeve shall be considered in the design and application of both Type A and Type B sleeves.

4 FABRICATION

4.1 Installation

For installation of a Type A or Type B sleeve, the entire circumference of the carrier pipe in the area to be covered by the sleeve shall be cleaned to bare metal. If hardenable fill material is to be used, the filler shall be applied to all indentations, pits, voids, and depressions. The sleeve shall be fitted tightly around the carrier pipe. Mechanical clamping by means of hydraulic equipment, draw bolts, or other devices may be used to ensure fit. A "no gap" fit should generally be achieved; however, a radial gap of up to 2.5 mm ($^3/_{32}$ in.) maximum may be allowed. For sleeves with welded ends, weld size and welder technique adjustments, such as buttering passes, may be required if the gap is excessive.

4.2 Filler Materials

If a filler material is used between the pipe and sleeve, care shall be exercised to ensure that it does not extrude into the weld areas. Burning of the filler material during welding will compromise the quality of the weld. Excess filler material shall be removed prior to welding. Pumping filler material into the annulus after the sleeve has been welded in place eliminates this problem, provided the annular gaps are large enough to allow the filler to flow into all voids.

4.3 Leaking Defects

For a leaking defect, the defect area shall be isolated prior to welding. For lines with flammable contents, the sleeve shall be purged with nitrogen or other inert gas to prevent the formation of a combustible mixture under the sleeve.

4.4 Welds

If circumferential fillet end welds are made, the sleeve's longitudinal seams shall be butt welded to full penetration, as shown in Fig. 2. Provision for venting during the final closure weld shall be made. The welding procedures for the circumferential fillet welds shall be suitable for the materials and conditions of weld-cooling severity at the installed location in the piping or pipelines, in accordance with the code of construction or post-construction code. A low hydrogen welding technique should be used. For longitudinal welds without backing strips, see para. 4.5. If the circumferential welds are not made, Type A, the longitudinal seams may consist of a groove butt weld or fillet-welded lap joint, as shown in Fig. 1.

4.5 Reduced Pressure

Reducing the carrier piping or pipeline operating pressure, and maintaining flow, while the repair is being made is recommended. See API RP 2201 for recommendations on welding pipe in service. The piping or pipelines may also be taken out of service to make the repair; however, burn-through shall be considered. Recommended pressure during sleeve installation for piping or pipelines is between 50% to 80% of operating pressure.

4.6 In-Service Welding

All of the aspects for in-service welding of Type B sleeve circumferential and full penetration longitudinal seams are not addressed by this document. PCC, API, ASME, and other industry information pertaining to in-service welding shall be considered when planning in-service welding. At a minimum, qualification of the welding process shall take into account

(a) the potential for hydrogen-induced cracking in the heat-affected zone as a result of accelerated cooling rate and of hydrogen in the weld environment

(b) the risk of forming an unacceptably hard heat-affected zone due to base metal chemistry of the sleeve and pipe materials

(c) possible burn-through of the pipe

4.7 Weld Procedure

The weld procedure, including preheat and postweld heat treatment requirements, and welder, or welding operators, shall be qualified under the applicable code of construction or post-construction code.

5 EXAMINATION

5.1 Visual Examination

All sleeve fit-ups shall be inspected prior to welding. Welds shall be visually examined.

5.2 Type A Sleeves

For Type A sleeves, the weld root area shall be visually examined during welding to verify proper penetration and fusion. The longitudinal welds shall be liquid penetrant, magnetic particle, or ultrasonically examined after completion.

5.3 Type B Sleeves

For Type B sleeves, the carrier pipe base material shall be ultrasonically examined for thickness, cracks, and possible lamination in the area where the circumferential welds are to be applied. Sufficient wall thickness shall exist to prevent burn-through. If a backing strip is not used under the longitudinal weld, the area under it shall also be ultrasonically examined prior to welding. Longitudinal seams shall be inspected after completion. The weld root area shall be examined during welding to verify proper penetration and fusion. The circumferential fillet welds should be magnetic particle or liquid penetrant examined after welding. Where delayed weld cracking is a concern, nondestructive examination of the circumferential fillet weld should be performed not less than 24 hr after welding has been completed. Alternatively, a welding procedure qualified under high cooling rate, higher carbon equivalent (CE), and testing completed after 48 hr of welding per API 1104 Appendix B, 20th Edition, should be considered.

5.4 In-Process Examination

The owner may require full "in-process" visual examination, as described in para. 344.7 of ASME B31.3, of the sleeve weld installation. When "in-process" examination is performed, the results shall be documented. Examinations shall be performed by personnel meeting the qualification requirements specified by the applicable code of construction or post-construction code.

5.5 NDE Examination

NDE examination methods shall be in accordance with ASME BPVC Section V and acceptance criteria in accordance with the applicable code of construction or post-construction code.

6 TESTING

A Leak Test should be performed on Type B sleeves in accordance with para. 6(a) or (b), as required by the owner.

(a) Perform a hydrotest of a Type B sleeve by pressurizing the annulus between the sleeve and the carrier pipe, in accordance with the applicable construction or post-construction code. The test pressure shall be selected such that the inner pipe will not collapse due to external pressure.

(b) Perform a Sensitive Leak Test as described in para. 345.8 of ASME B31.3 or other recognized national standard.

7 REFERENCES

AGA, American Gas Association, Pipeline Repair Manual December 31,1994

AGA, American Gas Association, 6th Symposium on Line Research Defect Repair Procedures, J.F. Kiefner October 29, 1979

Publisher: American Gas Association (AGA), 400 N. Capitol Street, NW, Washington, DC 20001

API RP 579, Fitness-for-Service

API RP 2201, Safe Hot Tapping Practices in the Petroleum and Petrochemical Industries

API Standard 1104, Welding of Pipelines and Related Facilities

Publisher: American Petroleum Institute (API), 1220 L Street, NW, Washington, DC 20005-4070

ASME B31.3, Process Piping

ASME Boiler and Pressure Vessel Code, Section V — Nondestructive Examination

ASME Boiler and Pressure Vessel Code, Section IX — Welding and Brazing Qualifications

Publisher: The American Society of Mechanical Engineers (ASME), Three Park Avenue, New York, NY 10016-5990; Order Department: 22 Law Drive, P.O. Box 2300, Fairfield, NJ 07007-2300

Article 2.7
Fillet Welded Patches With Reinforcing Plug Welds

(08)

1 DESCRIPTION

(a) This repair method describes the selection criteria, application limitations, design, fabrication, examination and testing of fillet welded surface patches with reinforcing plug welds to pressure-retaining components. Similar fillet welded surface patch repair methods without reinforcing plug welds are provided in another Article of this Standard.

(b) This repair method consists of fitting a repair plate to closely match the original component's exterior or interior surface. The repair plate is sized to cover the areas exhibiting damage, both at the time of repair and that anticipated for the repair's design life.

(c) The repair method is typically applied to pressure-retaining shells that have suffered local wall thinning (including through-wall) due to erosion, corrosion, and other local damage mechanisms.

(d) This repair method is applicable to cylindrical, spherical, flat, and conical shells as well as other pressure components.

(e) This repair method is generally suitable for service temperatures above the nil-ductility temperature of the materials of construction up to a maximum design temperature of 345°C (650°F). Use of this repair method for lower temperatures requires evaluation of notch toughness, nonductile fracture and other applicable low temperature effects. Use of this repair method for higher temperatures requires evaluation of thermal fatigue, creep, and other applicable high temperature effects.

(f) Figure 1 shows a typical application on a vessel with a nearby structural discontinuity (in this case a nozzle). The plan view on top shows two of many possible repair patch configurations, which are generally rectilinear in shape with rounded corners. The bottom sectional view shows the curvature matching aspect of each repair plate.

2 LIMITATIONS

(a) Part 1 of this Standard, "Scope, Organization, and Intent" contains additional requirements and limitations. This Article shall be used in conjunction with Part 1.

(b) This repair method is not limited by the component size. However, a sleeve type repair may be more suitable for those applications where axisymmetric behavior is important.

(c) This repair method shall not be used for lethal service applications or where the damage mechanism, the extent of damage, or likely future damage cannot be characterized. This repair method may be used in certain cases on areas with local crack-like flaws provided

(1) the growth has stopped, been arrested, or can be accurately predicted for all propagation modes, and

(2) the effect of the flaw is evaluated using detailed analyses.

3 DESIGN

3.1 General

(a) The design approach for this repair method is based in part on standard pressure component design calculations, such as those in the ASME BPV Code, Section VIII, Division 1. The application limitations imposed in section 2 apply to the governing load case resulting from internal pressure where the resultant stress is membrane stress. However, if the component to be repaired is subject to bending, torsion, wind loads, or to fatigue, the design shall include evaluation of these conditions using appropriate methods of analysis. In all cases, an engineering analysis shall be performed.

(b) In general, the patch material and welding filler metal should be the same or very similar (e.g., compositional, physical, and mechanical properties) to that of the pressure component's original construction. Repair material selection shall consider, as a minimum, characteristics such as chemistry, weldability, physical properties (such as coefficient of thermal expansion), mechanical properties (such as strength, ductility, notch toughness), and compatibility with the process medium.

(c) The thickness of the patch plate is dependent on material mechanical properties and the calculated attachment weld sizes.

(d) The size (length and width) of the patch plate is governed by the requirement that all attachment welds be located on sound base metal completely encompassing the damaged area(s) (see Fig. 1). The repair plate shall also be large enough to encompass any additional area(s) anticipated to experience similar or related damage during the life of the repair. The patch plate, including reinforcing plug welds, should overlap sound base metal by at least 25 mm (1 in.).

Fig. 1 Typical Shell Repair Near Discontinuity

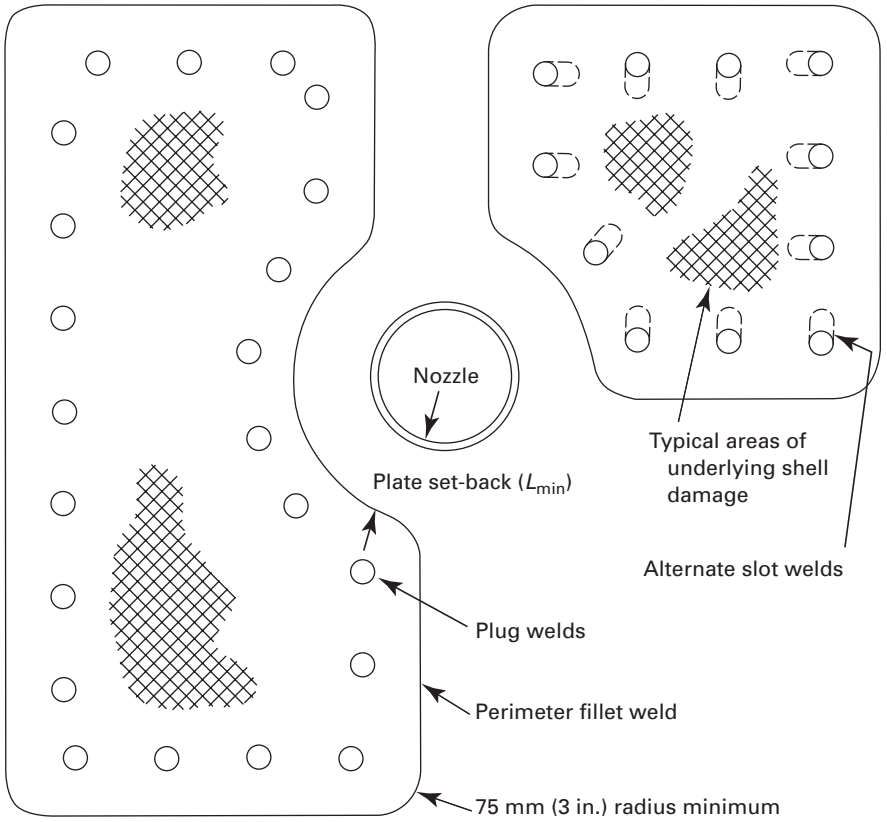

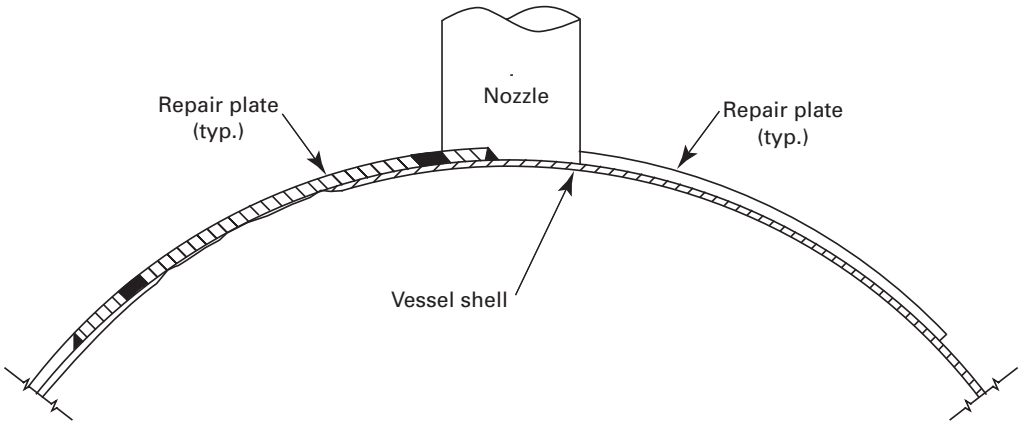

(e) This repair method is generally used on the outside surface of components subject to internal pressure. For applications under external pressure, a separate analysis to evaluate buckling and other instability considerations shall be performed.

(f) In assessing the applicability and service life of this repair method, consideration shall be given to material compatibility, future operating conditions, thermal and shrinkage effects of welding, the introduction of crevices and structural discontinuities, thermal transients and temperature differentials between the patch plate and the component, and other application limits such as examination and testing constraints. If the damage to be patched is, or is expected to be, through-wall, the effects of fluids (e.g., entrapment, concentration, corrosion, etc.) that may accumulate between the vessel and the patch plate shall be assessed. If this repair method is to be implemented during component operation, additional precautions may need to be taken for personnel safety.

(g) The design may consider the combined strength of the patch plate and the underlying shell, taking into account the strength of the fillet weld and plug weld joints, including joint efficiency. Consideration may also be given to excess thickness available adjacent to the damaged shell using applicable code area replacement rules for nozzles. No credit shall be taken for material required for future corrosion allowance.

3.2 Internal Pressure Loads

(a) For cylindrical components subject to internal pressure loads, applied forces on the repair patch shall be determined as follows:

(1) Circumferential Load. Unit forces in hoop direction:

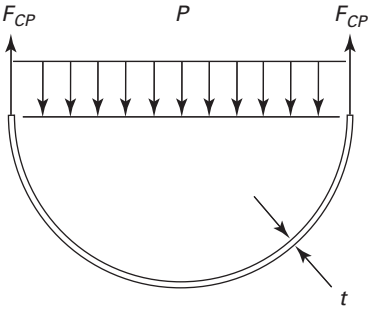

$$F_{CP} = \frac{PD_m}{2} \quad (1)$$

where

D_m = diameter at mid-wall of component, mm (in.)
F_{CP} = circumferential force due to internal pressure, N/mm (lb/in.)
P = internal design pressure, kPa (psi)

(2) Longitudinal Load. Unit forces in longitudinal direction:

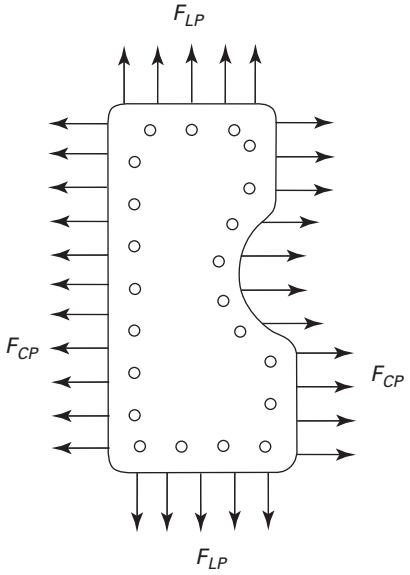

$$F_{LP} = \frac{PD_m}{4} \quad (2)$$

where

F_{LP} = longitudinal force due to internal pressure, N/mm (lb/in.)

(b) If other loads are applicable (such as bending, torsion, wind, etc.), they shall be determined and added to the pressure load such that

$$F_C = F_{CP} + F_{CO}$$

and

$$F_L = F_{LP} = F_{LO}$$

where

F_C = total circumferential force from all loads, N/mm (lb/in.)
F_{CO} = circumferential force due to other applicable loads, N/mm (lb/in.)
F_L = total longitudinal force from all loads, N/mm (lb/in.)
F_{LO} = longitudinal force due to other applicable loads, N/mm (lb/in.)

(c) Appropriate alternative force calculations for spherical, torispherical, or ellipsoidal pressure components shall be used when applicable.

3.3 Structural Discontinuity Evaluation

(a) For stresses near a nozzle or other structural discontinuity to be insignificant, the minimum distance between the fillet welded patch plate and the existing discontinuity should be

$$L_{\min} = 2(R_m t)^{1/2} \quad (3)$$

where

L_{min} = plate set-back distance (see Fig. 1), mm (in.)
R_m = radius at mid-wall of component, mm (in.)
t = wall thickness of component, mm (in.)

The factor of 2 applies the set-back distance $(R_m t)^{1/2}$ to both the existing nozzle (or other similar structural discontinuity) and the patch plate.

This proximity limit also applies to the distance between adjacent fillet welded patch plates, in those applications where more than one is employed on a given component.

(b) In those applications where the patch plate is to attach to existing nozzle reinforcement pads, the patch plate may be contoured to match the reinforcement pad perimeter and welded thereto with a full penetration joint.

(c) In those applications where the damaged shell is within L_{min} of a nozzle or other structural discontinuity, the patch plate should be designed as a reinforcement pad extending 360 deg around the nozzle/opening, and welded thereto with a full penetration joint. Alternatively, additional detailed analysis shall be performed to evaluate local stresses.

3.4 Allowable Load on Perimeter Fillet Weld

(a) The perimeter weld shall be sized such that the allowable load on the weld exceeds the longitudinal and circumferential loads.

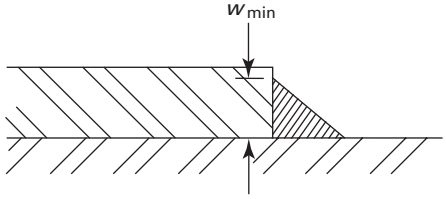

$$F_A = w_{min} E S_a \quad (4)$$

where

E = weld joint efficiency factor (0.55)
F_A = allowable force on fillet welds, N/mm (lb/in.); $F_A > F_C$ and F_L
S_a = allowable base metal stress, MPa (psi)[1]
w_{min} = minimum weld leg dimension, mm (in.)

NOTE: The maximum design fillet weld size shall not exceed the thickness of the thinner material being joined nor 40 mm (1.5 in.).

(b) Alternatively, the perimeter weld edge preparation may be beveled to increase the weld's effective throat thickness. In no case shall the effective throat exceed the thickness of the repair plate or the original component thickness.

3.5 Allowable Loads on Plug Welds

(a) Plug/slot welds may be designed to take up to 30% of the patch plate load. The allowable working load on a circular plug weld in either shear or tension shall be determined by

(SI Units)

$$F_P = 0.63\, S_a\, (d - 6)^2 \quad (5)$$

(U.S. Customary Units)

$$F_P = 0.63\, S_a\, (d - 1/4)^2$$

And the allowable working load on a slot weld shall be determined by

(SI Units)

$$F_s = 0.8\, S_a\, [(W - 6)\, (L - 6) - 0.86\, R^2] \quad (6)$$

(U.S. Customary Units)

$$F_s = 0.8\, S_a\, [(W - 1/4)\, (L - 1/4) - 0.86\, R^2]$$

where

d = the bottom diameter of the hole in which the weld is made, mm (in.)
F_P = total allowable working load on the plug weld, N (lb)
F_s = total allowable working load on the slot weld, N (lb)
L = the bottom length of the slot in which the weld is made, mm (in.)
R = the radius of the slot ends in which the weld is made ($R = W/2$), mm (in.)
W = the bottom width of the slot in which the weld is made, mm (in.)

(b) Plug welds are required in all cases to minimize stress at the root of the perimeter fillet welds and address load path eccentricity considerations in the perimeter welds. Plug weld holes should have a diameter not less than T + 6 mm (1/4 in.) and not more than 2T + 6 mm (1/4 in.). Plug welds shall be set back from the edge of the patch plate by not less than 2T nor more than 4T. Plug welds should be spaced to carry their proportion of the load, but their pitch (center-to-center spacing) should not be less than 3d.

(c) Plug weld holes should be completely filled with weld metal when the thickness of the patch plate (T) is 8 mm (5/16 in.) or less; for patch plates where $T > 8$ mm (5/16 in.), the holes should be filled to a depth of at least 1/2T or 5/16 of the hole diameter, whichever is larger, but in no case less than 8 mm (5/16 in.).

(d) For plug welds smaller than 19 mm (3/4 in.) diameter, slotted or obround plug welds may be used to minimize weld quality difficulties arising from accessibility and electrode manipulation constraints. Slot welds should have a width not less than T + 6 mm (1/4 in.) nor greater than 2T + 6 mm (1/4 in.), and a length not more than 3T + 6 mm (1/4 in.). The long axis of slot welds shall

[1] Compatible weld metal shall be of equal or greater strength.

be oriented perpendicular to the adjacent fillet welded edge. Set-back and spacing shall meet the requirements of para. 3.5(b).

3.6 Cold Forming Limits

(a) Carbon and low alloy steel patch plates fabricated by cold forming shall not exceed 5% extreme fiber elongation. The extreme fiber elongation shall be determined as follows:

(1) For double curvature

$$\frac{75T}{R_f}\left(1 - \frac{R_f}{R_o}\right) \le 5\% \quad (7)$$

where

R_f = final centerline radius of patch plate, mm (in.)
R_o = original centerline radius of patch plate (equals infinity for flat plate), mm (in.)
T = thickness of the patch plate, mm (in.)

(2) For single curvature

$$\frac{50T}{R_f}\left(1 - \frac{R_f}{R_o}\right) \le 5\% \quad (8)$$

(b) Patches cold formed beyond these limits may be used provided they receive appropriate post-forming stress relief prior to installation.

4 FABRICATION

(a) Plate edges may be cut to shape and size by mechanical means such as machining, shearing, grinding, or by thermal means such as flame or arc cutting. If thermal means are used, a minimum of 1.5 mm ($\frac{1}{16}$ in.) additional material shall be removed by grinding or machining. If the repair plate is greater than 25 mm (1 in.) thick, and the fillet weld size is less than the plate thickness, the weld prep edges shall be examined by magnetic particle (MT) or liquid penetrant (PT) methods to check for laminations. Laminations shall be cause for rejection unless repaired or found acceptable by fitness-for-service analysis in accordance with API 579-1/ASME FFS-1.

(b) Plug or slot weld holes may be fabricated by punching, drilling, machining, or flame/arc cutting. The ends of slot welds, if used, shall have a radius, R, equal to one-half the slot's width, W. If thermal means are used, a minimum of 1.5 mm ($\frac{1}{16}$ in.) additional material shall be removed by grinding or machining. If the repair plate is greater than 25 mm (1 in.) thick, and the plug/slot weld size is less than the plate thickness, the weld prep edges shall be examined by magnetic particle (MT) or liquid penetrant (PT) methods to check for laminations. Laminations shall be dispositioned as specified in (a) above.

(c) The patch plate may be formed to the required shape by any process that will not unduly impair the mechanical properties of the patch plate material. Where required due to repair plate size or access/interference considerations, split sections may be used when joined by full penetration welds.

(d) Parts to be fillet welded shall be fit as tightly as practical to the surface to be welded and in no event shall be separated by more than 5 mm ($\frac{3}{16}$ in.). If the separation at the faying edge of the plate is 1.5 mm ($\frac{1}{16}$ in.) or greater, the size of the perimeter fillet weld shall be increased by the amount of the separation.

(e) Welding procedures, welders and welding operators shall be qualified in accordance with the current requirements of the applicable code of construction or post-construction code. If not otherwise specified, ASME BPV Code, Section IX may be used for procedure and performance qualification. Guidance for preheat and/or postweld heat treatment, and for in-service welding, as applicable, shall be taken from the applicable code of construction or post-construction code.

(f) Field repair activities should conform to the following sequence:

(1) Paint, scale, rust, liquids and other foreign material shall be removed from the weld zone and an area not less than 40 mm ($1\frac{1}{2}$ in.) on either side of the weldment.

(2) In those areas that will be covered by the new patch plate, existing shell seam or girth welds shall be ground flush with the vessel or pipe O.D. and shall be examined by the MT or PT method.

(3) The new patch plate may be placed in position using any suitable method.

(4) Any seams within the patch itself, should be made first. The perimeter fillet weld may then be completed. Clamps or wedges may be used to ensure proper joint alignment and fit-up.

(g) Exposed metal surfaces shall be recoated, if applicable, after completion of all examination and testing.

(h) To preclude gas pressure buildup between the patch plate and the pressure component boundary, provisions for venting during the final closure weld or, if applicable, postweld heat treatment, may be necessary. If the patch plate is designed for through-wall defects but applied to the pressure boundary before being breached, the vent should be sealed after completion of welding and, if applicable, postweld heat treatment.

5 EXAMINATION

(a) Patch plate attachment welds shall be examined in accordance with the applicable code of construction or post-construction code by either the MT or PT methods. If not otherwise specified by the applicable code of construction or post-construction code, NDE shall be performed using procedures written and qualified in accordance with ASME BPVC Section V.

(b) If lifting lugs are used and left in place, their attachment welds shall be examined by MT or PT methods. At all locations where temporary lifting lugs,

welded clamps, and/or wedges are removed after patch plate installation, the removal areas shall be examined by MT or PT methods.

(c) Welds joining sections of patch plates made of separate pieces should be surface contoured and volumetrically examined by either radiographic or ultrasonic examination methods to the extent possible. If not practicable, multi-layer PT or MT examinations should be performed.

(d) If postweld heat treatment is required, the examination shall be performed after application of PWHT.

(e) The examination acceptance criteria of the applicable code of construction or post-construction code shall apply.

6 TESTING

(a) Testing shall be performed in accordance with the applicable post-construction code.

(b) The pressure component and installed patch plate(s) should be leak tested in accordance with the applicable post-construction code. Special safety precautions should be taken when pneumatic leak testing is performed.

(c) If permitted by the applicable post-construction code, nondestructive examination may be performed as an alternative to leak testing. Also, an initial service inspection may be performed of all weld joints after the pressure component has returned to normal operating pressure and temperature.

(d) Testing and inspections should be performed prior to reapplication of coating, insulation, or jacketing, as applicable.

7 REFERENCES

API 579-1/ASME FFS-1, Fitness-for-Service, June 5, 2007
Publisher: American Petroleum Institute (API), 1220 L Street NW, Washington, DC 20005-4070

ASME Boiler and Pressure Vessel Code, Section V — Nondestructive Examination
ASME Boiler and Pressure Vessel Code, Section VIII, Division 1 — Rules for Construction of Pressure Vessels
ASME Boiler and Pressure Vessel Code, Section IX, Qualification Standard for Welding and Brazing Procedures, Welders, Brazers, and Welding and Brazing Operators
Publisher: The American Society of Mechanical Engineers (ASME), Three Park Avenue, New York, NY 10016-5990; Order Department: 22 Law Drive, P.O. Box 2300, Fairfield, NJ 07007-2300

Article 2.8
Alternatives to Traditional Welding Preheat

(08)

1 DESCRIPTION

Preheating involves heating pieces to be welded to some temperature above their ambient temperatures prior to and during welding. Construction and post-construction codes often require preheat. However, under certain conditions it may be possible to use other alternatives to preheat. Whether preheat is required or not, preheat can provide any combination of the following benefits:

(a) reduce shrinkage stresses in the weld and adjacent base metal, especially in highly restrained joints

(b) provide a slower rate of cooling through the critical temperature range, preventing excessive hardening and reduced ductility of both the weld and heat-affected zone (HAZ)

(c) provide a slower rate of cooling through the 400°F range, allowing more time for hydrogen that may be present to diffuse away from the weld and adjacent base metal to avoid hydrogen cracking

Considerations such as the presence of nearby coatings or other components can make preheat required by the original construction code inadvisable or impractical to apply. However, if welding heat inputs near the maximum allowed by the qualified procedures are used, heat that is transferred to the mass of the assembly may be balanced by the welding heat input, resulting in the affected metal being heated up to or beyond the minimum preheat requirement, therefore permitting relaxed application of preheat from external means. This Article considers application of alternate preheat strategies or alternatives to traditionally specified preheat that might be permitted by careful selection and control of the welding process, consumables, and technique such as by weld bead sequencing.

2 LIMITATIONS

2.1 General

Part 1 of this Standard, Scope, Organization, and Intent, contains additional requirements and limitations. This Article shall be used in conjunction with Part 1.

2.2 Prohibited Reduction

Reduction in preheat may also be prohibited by user requirements, service conditions, or construction codes.

2.3 Inappropriate Cases

Reducing preheat may not be appropriate in many cases. Such situations include materials with elevated carbon content or carbon equivalent, high hardenability and/or geometries with high restraint.

2.4 Limited Access

Limited access may prevent the use of techniques or welding processes necessary for satisfactory performance of welding with lower preheat.

2.5 Welding

All welding shall be in accordance with an applicable construction or post-construction code, including welding procedures.

3 DESIGN

The following strategies and considerations may be permissible alternatives to the original code of construction or post-construction code preheat requirements:

(a) groove geometry
(b) welding process
(c) welding consumables
(d) evaluation of carbon equivalent
(e) evaluation of cracking parameter (Pcm)
(f) controlled deposition (temper bead) welding

3.1 Groove Geometry

Groove geometry and volume of weld metal should be minimized to reduce residual stresses, but not to the extent that the ability to weld is compromised or cracking results.

(a) Minimize residual stresses on weld and HAZ. It is difficult to avoid residual stresses when welding. As the molten puddle solidifies, it reduces in size and thus creates residual stresses as shown in Fig. 1.

(b) Thin, wide bead shapes with minimal thickness or cross section are more prone to cracking from reduced preheating than more rounded or conical shapes. Welded joints with greater transverse shrinkage, as shown in Fig. 2, are more susceptible to cracking. Welds that exhibit wider groove angles and greater weld volume normally also exhibit higher levels of residual stress.

3.2 Welding Process

Welding processes that minimize dilution and are "low hydrogen" in application should be considered.

Fig. 1 Typical Residual Stresses in a Weld

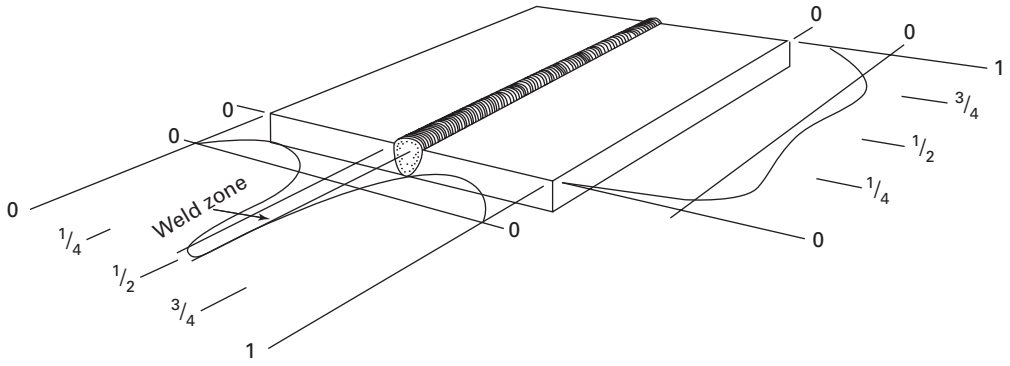

Fig. 2 Effect of Weld Area on Transverse Shrinkage

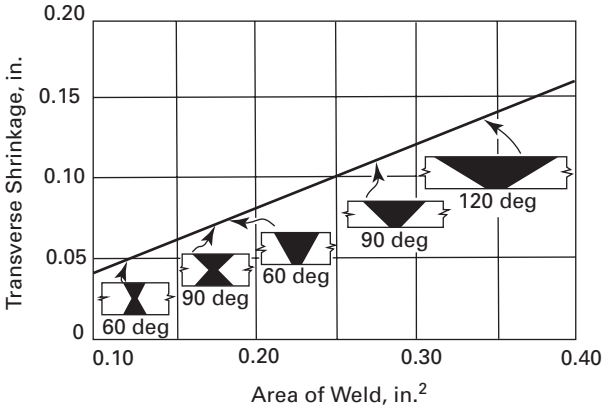

(a) GMAW and GTAW are particularly well suited to control dilution and do not typically introduce hydrogen into the weld deposit. These processes should be candidates where reduced preheat is desirable.

(b) SMAW, FCAW, or SAW may also be used where increased deposition and lower shrinkage is important. Care shall be observed during qualification of welding procedures to evaluate heat input and avoid parameters that would create excessive penetration, dilution, or shrinkage.

3.3 Welding Consumables

Welding consumables should tolerate accelerated cooling rates (e.g., resist hot cracking during cooling), be "low hydrogen" by design (H4 or H5 are optimum), and exhibit good weldability.

The use of welding consumables that provide equivalent but not overmatching properties (lower strength, minimized carbon ferritics, nonferrous, etc.) should be considered to avoid mismatch in strength levels between the weld metal, heat-affected zones, and base metals. Most commercial weld metal is formulated to compensate for dilution and/or postweld heat treatments under a variety of conditions. Therefore, most weld metals exhibit strengths much higher than their specification minimums. This can be very important when designing and implementing repair welding. A comparison of typical weld metal strengths for selected consumables is shown in Table 1. Where this approach is used, actual properties of the weld metal should be verified from either certified material test reports or representative test coupons.

3.4 Carbon Equivalent

Carbon equivalent (CE) may be used as a means for determining the actual necessity for preheat and the level required.

Where (Wt. %):

$$CE = C + (Mn + Si)/6 + (Cr + Mo + V)/5 + (Ni + Cu)/15$$

$CE \le 0.45\%$; preheat is normally optional

$0.45\% \le CE \le 0.60\%$; preheat 200°F to 400°F

$CE > 0.60\%$; preheat 400°F to 700°F

where CE > 0.5, delaying final NDE for at least 24 hr should be considered to identify any delayed cracking.

3.5 Cracking Parameter (Pcm)

Where carbon content is equal to or less than 0.17 wt.% or where high-strength steels are involved, the Ito & Bessyo Cracking Parameter (Pcm) can be used. This approach provides a more accurate prediction for when preheat will be needed, when preheat is mandatory, and at what recommended temperature.

Where [Pcm in wt.%]:

$$Pcm = C + \frac{Si}{30} + \frac{Mn + Cu + Cr}{20} + \frac{Ni}{60} + \frac{Mo}{15} + \frac{V}{10} + 5B\ 2$$

$Pcm \le 0.15\%$; preheat is normally optional

$0.15\% < Pcm < 0.26\%$ to 0.28%; preheat 200°F to 400°F

$Pcm > 0.26\%$ to 0.28%; preheat 400°F to 700°F

Table 1 Comparison of Specification and Actual Weld Metal Properties

	Specification Requirements, ksi		Typical As-Welded, ksi		Typical Stress Relieved, ksi	
Filler Metal	Ultimate	Yield	Ultimate	Yield	Ultimate	Yield
E6013	62	50	74	64	...	...
E6018	67	55	68	57	...	...
E7018	72	60	87	79	83(1)	74(1)
E7018-A1	70(1)	57(1)	90	71	84(1)	70(1)
E8018-B2	80(2)	68(2)	118	103	95(1)	79(1)
E9018-B3	90(2)	77(2)	141	127	101(1)	87(1)
E9015-B9	90(3)	77(3)	210	...	120(4)	100(4)
ER70S-2	70	58	74	60	...	...
ER70S-6	72	60	94(5)	75(5)	85(1), (5)	71(1), (5)
ER80S-D2	80	68	110	79	100(2)	86(2)
ER70S-A1	80(6)	68(6)	92	79	90(2)	72(2)
ER90S-B3	90(2)	78(2)	...	...	104(2)	93(2)

NOTES:
(1) Stress relieved @ 621°C (1,150°F) for 1 hr.
(2) Stress relieved @ 690°C (1,275°F) for 1 hr.
(3) Stress relieved @ 746°C (1,375°F) for 1 hr.
(4) Stress relieved @ 760°C (1,400°F) for 1 hr.
(5) GTAW process.
(6) SGMo DIN 8575, Wks. No. 1.5424.

3.6 Controlled Deposition Welding

Use of controlled deposition (temper bead) procedures can be useful to generate fine grain heat affected zones and improve notch toughness. This method should be considered when either elevated preheat or code-required postweld heat treatment cannot be used. Rules for qualification of procedures are included in API 510, 7.2.3; ASME IX, QW-290; and ANSI NB-23.

3.6.1 Where similar composition weld metal is used, this method will NOT lower residual stresses. An evaluation to consider the effect of welding residual stresses should be conducted where this method is to be used.

4 FABRICATION

In order to use alternative preheating strategies, fabrication techniques should be carefully controlled to avoid the problems that preheat would be employed to mitigate. Welding processes and consumables that are less likely to introduce hydrogen can be chosen over other options. Certain techniques can minimize or reduce residual stresses. Careful monitoring should be done to ensure that alternatives are employed properly. The following describe or are important for successful implementation of these techniques.

4.1 Cleanliness

Contaminants (dirt, grease, moisture, etc.) should always be removed prior to application of any welding.

Fig. 3 Typical Back Stepping Weld Sequence

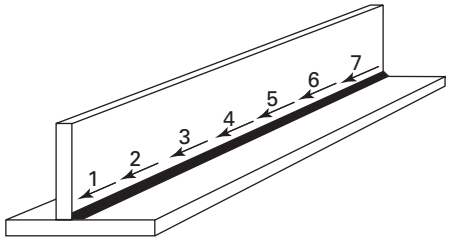

4.2 Welding Technique

The technique used during welding has a significant effect on shrinkage, resulting residual stresses, controlling heat input, and avoiding cracking issues.

(a) Short versus long beads typically minimize longitudinal shrinkage. Back stepping (Fig. 3) or special sequencing to reduce residual stresses may need to be employed.

(b) Control or minimize heat input. Stringer beads with minor oscillation versus wide weave beads should be used. See Fig. 4.

4.3 Peening

Peening can be an effective technique for minimizing shrinkage and distortion. It is not normally used or permitted on the root and final passes of a weld. For peening to be effective, the metal should be deformed

Fig. 4 Difference Between Oscillated Stringer Beads (Left) and Wide Weave Beads (Right)

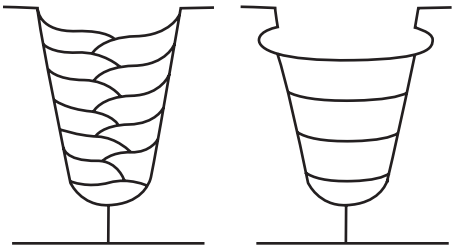

and yield. Creating dimples in the surface with a needle gun, etc., is NOT equivalent to peening.

4.4 Minimizing Cracking

Crater and weld bead cracking can be minimized or eliminated by implementing proper workmanship techniques.

(a) Weld beads with round cross sections versus thin, wide beads should be deposited as shown in Fig. 5 to minimize cracking.

(b) Abrupt start/stops should be avoided. Use up/down slope techniques with either process manipulation and bead shaping or via electronic means with the welding power source.

(c) Sufficient material should be deposited to avoid cracking from shrinkage and normal construction influences. A good rule of thumb to avoid cracking from insufficient weld metal deposited (and required in many construction codes) is a minimum of 10 mm ($\frac{3}{8}$ in.) or 25% of the weld groove thickness.

4.5 Preheat Methods

Preheating may be conducted with flame (air-fuel or oxy-fuel), electrical resistance, or electrical induction methods in both the shop and field. Regardless of the method, heating should be uniform and through thickness unless otherwise specified.

4.6 Preheat Monitoring

A variety of devices are available for measuring and monitoring temperatures. The component or piece being welded should be preheated to allow the heat to soak into the material. Where possible, this should be monitored and validated. Monitoring the surface temperature a predetermined distance away from the weld edge is normally adequate for most applications. It is never acceptable to make or take readings that would result in contamination of the weld groove.

(a) Temperature Indicating Crayons. These crayons or pencil-like devices are designed to melt at specific temperatures. This method can be used as a simple and economical way of determining that a minimum temperature has been achieved; i.e., the crayon melts. One limitation is that the temperature of the component above the melting temperature of the crayon is unknown. Where excessive temperature is a concern, multiple crayons with different temperatures should be employed.

(b) Electrical/Electronic Temperature Monitoring. For preheat and welding operations, instantaneous devices such as contact pyrometers or direct-reading thermocouples with analog or digital readout can be used. All devices shall be calibrated or have some means of verifying their ability to measure the desired temperature range. Because of their ability to provide continuous monitoring and data storage, thermocouples using chart recorders or data acquisition systems should be used over instantaneous measuring devices for both preheat and PWHT operations.

5 EXAMINATION

(a) A surface examination should be performed to ensure that use of a preheat alternative did not result in or promote cracking or other unacceptable condition.

(b) Volumetric examination of the final weld, where required, should be performed in accordance with an applicable construction or post-construction code.

(c) Welds in high strength low alloy (HSLA) steels or steels having a CE above 0.5% are prone to delayed cracking. A waiting period of 24 hr to 48 hr to detect delayed cracking before final examination should be required.

(d) The examination should be documented and include, as a minimum: type of examination, what was examined, who performed the examination, when it was performed, and results of the examination.

6 TESTING

Testing shall be performed in accordance with an applicable code of construction or post-construction code.

7 REFERENCES

ANSI/NB-23-2007, National Board Inspection Code

Publisher: American National Standards Institute (ANSI), 25 West 43rd Street, New York, NY 10036

API 510-2006, Pressure Vessel Inspection Code: Maintenance Inspection, Rating, Repair, and Alteration

Publisher: American Petroleum Institute (API), 1220 L Street NW, Washington, DC 20005-4070

ASM Handbook Volume 6: Welding, Brazing, and Soldering, Ninth Edition

Publisher: ASM International (ASM), 9639 Kinsman Road, Materials Park, OH 44073-0002

ASME Boiler and Pressure Vessel Code, 2007 Edition, Code Cases: N-373, N-594, N-606, N-638, N-644, and 2321

Fig. 5 Effect of Weld Bead Cross Section on Cracking

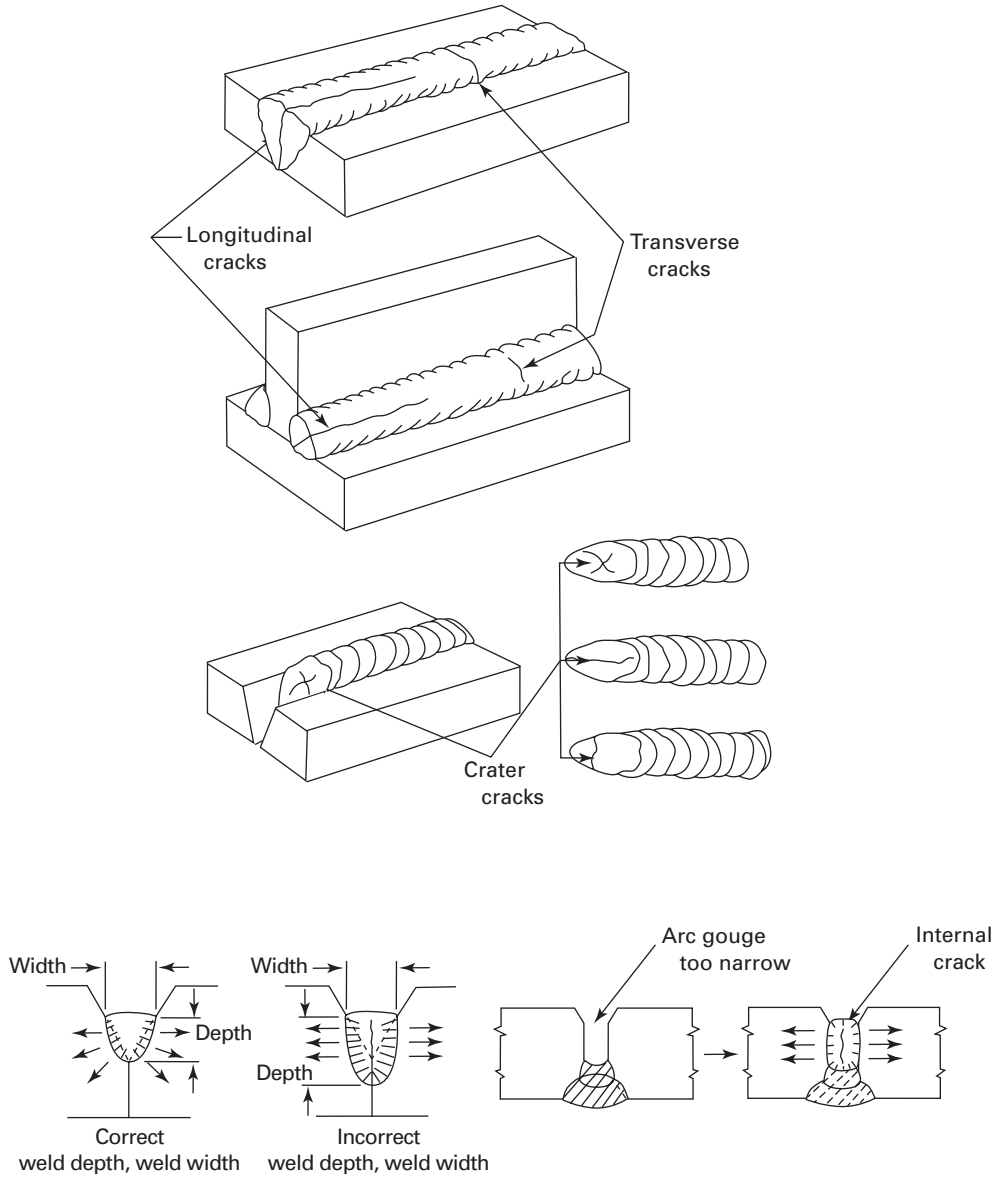

ASME B31.1-2007, Power Piping
ASME B31.3-2006, Process Piping

Publisher: The American Society of Mechanical Engineers (ASME), Three Park Avenue, New York, NY 10016-5990; Order Department: 22 Law Drive, P.O. Box 2300, Fairfield, NJ 07007-2300

AWS D1.1/D1.1M-2006, Structural Welding Code, Appendix XI

Publisher: American Welding Society (AWS), 550 NW LeJeune Road, Miami, FL 33126

Blodgett, O. W., Design of Welded Structures, The James F. Lincoln Arc Welding Foundation, Cleveland, OH

Cary, H. B., Modern Welding Technology, Second Edition, Prentice Hall, New York, NY

Ito, Y., and Bessyo, K., Weldability Formula of High Strength Steels Related to Heat Affected Zone Cracking, *Journal of Japanese Welding Society*, 1968

Newell, Jr., W. F., Euroweld Ltd., Certified Material Test Reports

Newell, Jr., W. F., Understanding and Using Carbon Equivalent Formulas, *Welding Journal*, September 1995

Stout, R. D., Weldability of Steels, Fourth Edition, Welding Research Council, Shaker Heights, OH

(08)

Article 2.9
Alternatives to Postweld Heat Treatment

1 DESCRIPTION

1.1 General Considerations

This Article addresses alternatives to postweld heat treatment for repair welds. Under certain service conditions, PWHT of a repair weld in accordance with the code of construction can be inadvisable or impractical. An example of such a condition would be a penetration or embedment surrounded by reinforced concrete or liquid media that could be damaged or create an unsafe condition by application of PWHT temperatures. In addition, inspection of pressure vessels, tanks, and piping which have been in service can reveal defects or damage which require weld repair but not redesign of the item containing the defect. The original construction code or owner can require postweld heat treatment (PWHT).

1.2 Factors Affecting Selection

(a) Postweld heat treatment is applied to ferritic welds and welded components to reduce high levels of residual stress, provide tempering to reduce hardness, and to diffuse hydrogen.

(b) Time and temperatures for PWHT are specified with respect to individual types of material and are selected to be performed below the lower (critical) transformation temperature of the material.

(c) Alternatives to postweld heat treatment can involve application of elevated preheat and/or implementation of specific welding techniques, bead sequencing, and increased control of the welding process.

2 LIMITATIONS

2.1 Post-Construction Code

Part 1 of this Standard, Scope, Organization, and Intent, contains additional requirements and limitations. This Article shall be used in conjunction with Part 1.

2.2 Methods

Only methods that are recognized in an applicable code of construction or post-construction code, qualified, or as justified through performance of a risk assessment evaluation, shall be used.

2.2 Suitability Tests

Tests to demonstrate suitability of the repair procedure may be needed if service conditions are subject to hydrogen embrittlement or at temperatures in the creep range or if the alternative is being considered for "on-stream" repairs or "hot tapping" on piping systems. Testing may be in accordance with owner criteria, the code of construction or post-construction code.

2.3 Resistance to Service Conditions

If resistance to hydrogen or sulfide or stress cracking is a service requirement, test evidence shall be developed appropriate to the risk involved to show that a maximum hardness in weld metal and heat-affected base metal is not exceeded when qualifying a specific Welding Procedure Specification (WPS). Maximum hardness shall be as required by the owner, the code of construction, or post-construction code.

2.4 Residual Stress Reduction

If reduction of residual stresses in weldments is required for successful operation in services subject to stress corrosion cracking (e.g., where amines, caustics, or carbonates are involved), then alternatives to postweld heat treatment shall be evaluated and determined to be acceptable for the intended service prior to use.

2.5 Altering Material Properties

Some steels are susceptible to metallurgical change such that loss of notch toughness can occur in the weld heat-affected zone and in the base metal. Weld metal can also experience a loss of toughness and/or strength when subjected to PWHT. In other steels, intergranular cracking (often called reheat or stress relief cracking) can occur in the weld heat-affected zone during PWHT while excessive postweld heat treatment (temperature and hold times) can also cause loss of strength in the weld and/or base metal.

3 DESIGN

3.1 Dissimilar Metal Welds

Welding involving dissimilar materials shall be separately evaluated unless specifically addressed by the applicable post-construction code. Guidance in this area is provided in Method 5, NBIC, of ANSI/NB-23.

3.2 Procedures

Requirements for implementing alternatives to postweld heat treatment should be outlined in specific documented instructions that are accompanied by a qualified Welding Procedure Specification.

Table 1 Summary of Postweld Heat Treatment Requirements and Potential Alternatives

Code	Location
API 510	Paragraph 7.3.2
ASME Section I	PW-39, PW-40
ASME Section III-NB/NC/ND/NE/NF/NG/NH	Although the Subsections of ASME Section III have rules for PWHT and alternatives (e.g., NB-4622), nuclear components and systems are unique in that they have their own specific post-construction code for qualification, repair, and examination; ASME Section XI (see below)
ASME Section VIII, Division 1	UCS-56, UHT-56, UHA-32, UHA-105, UNF-56, UCL-34, ULW-26, ULT-56
ASME Section VIII, Division 2	AF-402, AF-420, AF-550, AF-630, AF-753, AF-754, AF-820, AT-115, Appendix 26 (26-200)
ASME Section VIII, Division 3	KF-400, KF-630, KF-830
ASME Section IX	QW-290
ASME Section XI	IWA-4600
ASME B31.1	Paragraph 132.3, Tables 132 and 132.1
ASME B31.3	Paragraph 331.2.2, Table 331.1.1
AWS D1.1	Paragraphs 5.8.2 and 5.8.3
AWS D10.8	Paragraph 6 and Table 4
AWS D10.10	Paragraph 13.2
NBIC; NB-23	Part 3

4 FABRICATION

4.1 Application of Elevated Preheat

Many codes of construction or post-construction codes permit use of elevated preheat as an alternative to performing postweld heat treatment. Examples of alternatives can be found in API 510, ASME BPVC Section I (PW-39), ASME BPVC Section VIII, ASME B31.1 (Table 132), and ANSI/NB-23. Criteria are expressed as a function of base metal specification, type, grade, and thickness. Table 1 lists a variety of PWHT methods and alternates from potential applicable codes. The table is not all-inclusive and should be used as a guide for selecting an alternative to postweld heat treat for work that is to be conducted with a specific code of construction or post-construction code.

4.2 Alternative Welding Methods

4.2.1 Temper Bead Welding. Tempering of weld deposits may be accomplished by implementing special weld sequences and techniques. Controlled deposition techniques such as temper bead welding, for example, are offered in many construction or post-construction codes as an alternative to postweld heat treatment.

4.2.2 Satisfying Properties. The method used shall produce weldments that satisfy mechanical and corrosion properties in accordance with the applicable code of construction or post-construction code.

4.2.3 Absence of Code Rules. When no code of construction or post-construction code is specified, the rules in API 510, 7.2.3; ASME BPVC Section IX, QW-290; or ANSI/NB-23, Part 3, may be used as rules for controlled deposition welding techniques.

4.3 Requiring Additional Methods

Application of alternative methods may require that reliable preheat maintenance techniques, low hydrogen welding consumables, and optimum materials storage practices be implemented.

5 EXAMINATION

Examination shall be in accordance with the applicable code of construction or post-construction code.

6 TESTING

Testing shall be in accordance with the applicable code of construction or post-construction code.

7 REFERENCES

ANSI/NB-23-2007, National Board Inspection Code

Publisher: American National Standards Institute (ANSI), 25 West 43rd Street, New York, NY 10036

API 510, Pressure Vessel Inspection Code: Maintenance Inspection, Rating, Repair, and Alteration; Revision 06, 2006

Publisher: American Petroleum Institute (API), 1220 L Street NW, Washington, DC 20005-4070

ASME Boiler and Pressure Vessel Code, 2007 Edition, Section I — Rules for Construction of Power Boilers

ASME Boiler and Pressure Vessel Code, 2007 Edition, Section III, Rules for Construction of Nuclear Facility Components; Subsections NCA, NB, NC, ND, NE, NF, NG, and NH

ASME Boiler and Pressure Vessel Code, 2007 Edition, Section VIII, Rules for Construction of Pressure Vessels; Divisions 1, 2, and 3
ASME Boiler and Pressure Vessel Code, 2007 Edition, Section IX, Welding and Brazing Qualifications
ASME Boiler and Pressure Vessel Code, 2007 Edition, Section XI, Rules for Inservice Inspection of Nuclear Power Plant Components
ASME B31.1-2007, Power Piping
ASME B31.3-2006, Process Piping
Publisher: The American Society of Mechanical Engineers (ASME), Three Park Avenue, New York, NY 10016-5990; Order Department: 22 Law Drive, P.O. Box 2300, Fairfield, NJ 07007-2300
AWS D1.1/D1.1M-2006, Structural Welding Code — Steel
AWS D10.8-1996, Recommended Practices for Welding Chromium-Molybdenum Steel Piping and Tubing
AWS D10.10-1999, Recommended Practices for Local Heating of Welds in Piping and Tubing
Publisher: American Welding Society (AWS), 550 NW LeJeune Road, Miami, FL 33126
Recommended Practices for Local Heating of Welds in Pressure Vessels, WRC Bulletin 452, June 2000.

Article 2.10
In-Service Welding Onto Carbon Steel Pressure Components or Pipelines

(08)

1 DESCRIPTION

This Article addresses the requirements and precautions associated with welding onto pressure components or pipelines while the system is still in operation. In-service pressure components or pipelines include pressure equipment and piping and are defined as systems in which the contents may or may not be pressurized and/or flowing but affect the way the weld cools. This Article is intended to be used in conjunction with Part 2 of this document or another applicable code of construction or post-construction code.

There are two primary concerns when performing in-service welding. The first concern is "burn-through," also referred to as "blowout." A burn-through occurs when the unmelted base material under the weld pool loses the ability to contain the contents of the pressure components or pipeline allowing the contents to be expelled. Welding onto pressure components or pipelines with thin walls [e.g., 4.8 mm (0.188 in.) or less] is possible as long as precautions are taken. Such precautions include controlling the heat input or penetration of the welding process and using smaller diameter electrodes [e.g., 2.4 mm (0.094 in.)] when the wall thickness is less than 6.4 mm (0.250 in.). Safety aspects and contingency planning aspects for an occurrence of burn-through should be planned for in accordance with company practices, industry standards (e.g., API Recommended Practice 2201), or post-construction code.

The second concern is hydrogen cracking. Hydrogen cracking occurs when tensile stresses are acting on the weld, hydrogen is present in the weld and, when the weld solidifies, the resultant weld microstructure is crack susceptible. If any of the three conditions is eliminated or reduced below a threshold level, then hydrogen cracking will not occur. Tensile stresses can always be assumed due to the shrinkage of the weld upon cooling. Hydrogen, typically, cannot be eliminated but can be reduced by using proper low hydrogen welding processes such as shielded metal arc welding with EXX18 or EXX15 type electrodes. Crack-susceptible microstructures typically have high microstructure hardness and are controlled by the carbon equivalence of the material and the rate at which the weld cools.

The likelihood of developing microstructures susceptible to hydrogen cracking can be high because in-service welds tend to have accelerated cooling rates due to the ability of the pressure components or pipeline contents to pull heat from the weld region. The chance of developing a crack-susceptible microstructure can be reduced by using welding procedures that overcome the cooling effect of the pressure components or pipeline contents or by altering the pressure components or pipeline operating conditions during in-service welding. Such welding procedures include using sufficiently high heat input levels or by using specific weld deposition sequences. The most common in-service welding practices used to reduce hydrogen cracking concerns incorporate both a low-hydrogen welding process and a welding procedure that reduces the susceptibility of forming a crack-susceptible microstructure. The use of preheat is another technique that is commonly used to reduce the susceptibility of forming a crack-susceptible microstructure but it may be difficult to apply to in-service welding applications because of the ability of the pressure components or pipeline contents to cool the pipe wall especially for thin-walled applications. The cooling effect of the pressure components or pipeline contents can interfere with achieving the proper preheating temperature.

Successful application of in-service welding procedures requires a balance between the probability of burn-through and reducing the probability of hydrogen cracking. For example, when welding onto a pipeline less than 6.4 mm (0.250 in.) thick it might be necessary to reduce the welding heat input to lower the probability of burn-through; however, the lower welding heat input could result in a weld microstructure which is susceptible to hydrogen cracking. When the maximum required welding heat input to eliminate the probability of burn-through is lower than the minimum required heat input to protect against hydrogen cracking then alternative precautions need to be taken (e.g., welding procedure which included a temper bead deposition sequence).

2 LIMITATIONS

2.1 Additional Requirements

Part 1 of this Standard, Scope, Organization, and Intent, contains additional requirements and limitations. This Article shall be used in conjunction with Part 1.

2.2 Piping and Pipeline Modifications

This Article is limited to application of in-service welding. Though this Article covers in-service welding aspects, not all aspects of pressure components or pipeline modifications that are performed to modify or expand a piping system (e.g., the hot-tapping procedure that may follow the in-service weld) are covered by this Article. This Article should be used in conjunction with another applicable code of construction or post-construction code which deals with the specifics of the pressure components or pipeline modification (e.g., for hot tapping, refer to API Recommended Practice 2201).

2.3 Pressure Components or Pipeline Material

This Article shall be limited to in-service welding onto all carbon steel pressure components or pipelines. This Article excludes welding onto stainless steels, alloyed steels (e.g., Cr-Mo), or nonferrous materials.

2.4 Pressure Components or Pipeline Contents

Before performing any in-service welding, the owner shall evaluate the effect that in-service welding could have on the contents of the pressure components or pipeline system (e.g., combustion, explosion, and increased susceptibility to corrosion or embrittlement). In-service welding should only be performed on pressure components or pipelines where the evaluation indicates that there is not a significant risk associated with potential metallurgical degradation or chemical reaction from the in-service welding process and not a significant risk of chemical reaction in the process fluid as a result of potential contact with high metal temperatures.

2.5 Operating Pressure

An adjustment in the pressure during in-service welding may not be required from a welding perspective but may be necessary to increase the safety of the welder if a burn-through does occur. Safety aspects and contingency planning aspects for an occurrence of a burn-through should be planned for in accordance with company practices, industry standards (e.g., API Recommended Practice 2201), or post-construction code.

2.6 Operating Flow

An adjustment in flow during in-service welding may increase hydrogen cracking risk (e.g., increase flow) or burn-through risk (e.g., reduce flow). An adjustment in flow should be addressed prior to in-service welding.

2.7 Postweld Heat Treatment (PWHT)

PWHT is difficult to perform while the pressure components or pipeline system remains in service. If PWHT is required, the owner shall address all additional concerns to assure the welding and subsequent PWHT will be completed in a safe manner. If this cannot be achieved, then an alternative repair method shall be evaluated.

3 DESIGN

3.1 In-Service Fillet Weld Procedure

An in-service fillet weld procedure is defined as a procedure that is used to join additional material onto the in-service pressure components or pipeline to reinforce a damaged area (e.g., full encirclement sleeves and patch plate repairs) or to facilitate a modification (e.g., proprietary full encirclement hot-tap fitting). The fillet weld shall be designed in accordance with an applicable code of construction or post-construction code.

3.2 In-Service Attachment Weld Procedure

An in-service attachment weld procedure is defined as a procedure that is used to make a modification to existing pressure components or pipeline and usually includes a groove weld joint. The attachment weld shall be designed under one of the following two criteria:

(a) If the attachment provides adequate reinforcement in accordance with an applicable code of construction or post-construction code, no further reinforcement is required.

(b) If the attachment does not provide adequate reinforcement in accordance with an applicable code of construction or post-construction code, additional reinforcement is required.

3.3 In-Service Weld Metal Buildup Procedure

An in-service weld metal buildup procedure is defined as a procedure that is used to deposit weld metal onto the surface of the pressure components or pipeline to reinforce a thinned area (e.g., metal loss due to corrosion or erosion). The weld metal buildup shall be designed in accordance with an applicable code of construction or post-construction code.

4 FABRICATION

4.1 Welding Procedure Qualification: Welding

When approved by the welding engineer or welding inspector, a welding procedure qualified to the applicable new construction code or post-construction code may be used for in-service welding applications. However, the welding procedures that are to be used for welding onto in-service pressure components or pipeline shall address the probability of burn-through and hydrogen cracking. When required by the welding engineer or welding inspector, the welding procedure shall be qualified using the set-up outlined in Mandatory Appendix I and the testing in para. 4.2. The essential variables for the welding procedure qualification shall be in accordance with an applicable code of construction or post-construction code and should include the

in-service welding essential variables listed in para. 4.1.1.

WARNING: Materials that have high carbon equivalent values (e.g., > 0.45) or experience severe weld cooling rates (i.e., high cooling potential) may require special precautions. Such precautions may include but are not limited to temper bead welding sequence or applying a preheat step prior to in-service welding.

4.1.1 In-Service Welding Essential Variables. The in-service welding essential variables are specific requirements for in-service welding that should be used in addition to the essential variables from an applicable code of construction or post-construction code.

4.1.1.1 Weld Type. In-service welds shall be grouped into one of the following three types and qualified separately:

(a) in-service fillet weld
(b) in-service attachment weld
(c) in-service weld metal buildup

4.1.1.2 Cooling Potential. The rate at which a weld cools, or cooling potential, is an essential variable [e.g., cooling time from 800°C to 500°C (1472°F to 932°F) (sec) or cooling rate at 556°C (1,000°F) (°/sec)]. An increase in the cooling potential of the in-service pressure component or pipeline greater than the cooling potential used during the qualification of the welding procedure requires requalification. The cooling potential may be determined by direct measurement, calculation, computer models, or a combination of these methods.

NOTE: In the procedure qualification, wall thickness is not an essential variable but is directly related to the cooling potential of the pressure components or pipeline, which is an essential variable.

4.1.1.3 Carbon Equivalence. The in-service welding procedure should be grouped according to carbon equivalence of the material. Carbon equivalence is specified separately for the in-service pressure components or pipeline and the second base material (e.g., full-encirclement sleeve or attachment material). An in-service welding procedure qualified on a specific carbon equivalent material may also be adequate for lower carbon equivalent materials assuming the cooling potentials are the same. A procedure qualified on lower carbon equivalent material can be used in a repair application on a higher carbon equivalent material provided that the cooling potential of the repair application is less than the cooling potential of the qualified procedure and there is no increase in hydrogen cracking susceptibility. The carbon equivalent should be calculated using the following formula with the elements expressed in weight percent amounts:

$$CE = C + \frac{Mn}{6} + \frac{Cr + Mo + V}{5} + \frac{Ni + Cu}{15}$$

4.1.1.4 Welding Process. A change in the welding process shall require requalification.

4.1.1.5 Welding Consumable. An increase in the diffusible hydrogen level of the welding consumable or a change in the electrode type as defined by Table QW-432 in ASME BPV Code Section IX, or another applicable code of construction or post-construction code, shall require requalification.

4.1.1.6 Heat Input. The heat input range is determined by the weld procedure qualification and is the range that will produce a weld that will not burn through and has a low likelihood of producing a crack-susceptible microstructure. A change in the heat input range shall require requalification. The heat input should be calculated in accordance with QW-409.1(a) or (b) in ASME BPV Code Section IX, or another applicable code of construction or post-construction code.

(a) An increase in the heat input over the range specified in the in-service procedure qualification or specified in the in-service welding procedure shall be evaluated for burn-through risk. The probability of burn-through should be evaluated experimentally, by computer simulation, or a combination of these methods.

(b) A decrease in the heat input below the range specified in the in-service procedure qualification or specified in the in-service welding procedure shall require requalification to determine the probability of hydrogen cracking susceptibility. Hydrogen cracking susceptibility should be evaluated using the test outlined in para. 4.2.

4.1.1.7 Welding Current. A change in the range of welding current used in the procedure qualification or specified in the welding procedure shall require requalification.

4.1.1.8 Postweld Bakeout. A reduction of the temperature or time of the application of a postweld bakeout shall require requalification. When specified, the minimum soaking temperature and time shall be specified. Any potential effect the postweld bakeout has on the pressure components or pipeline contents shall be evaluated.

4.1.1.9 Preheat. A reduction of the temperature or time of application of a preheat requirement shall require requalification. When specified, the minimum soaking temperature and time shall be specified. Any potential effect the preheat requirement has on the pressure components or pipeline contents shall be evaluated.

4.1.1.10 Hydrogen Bakeout. A change in the temperature or time of application of the hydrogen bakeout procedure shall require requalification. Any potential effect the hydrogen bakeout requirement has on the pressure components or pipeline contents shall be evaluated.

4.1.1.11 Surface Bead Placement. Any change in weld bead position or deposition sequence of the in-service welding procedure shall require requalification.

Table 1 Type and Number of Test Specimens Required for an In-Service Welding Procedure Qualification

Wall Thickness	In-Service Weld Type	Tests				
		Face Bend	Side Bend	Nick-Break	Metallography	Hardness
≤12.7 mm (0.500 in.)	Fillet	4	...	4	2	2
	Attachment	4	...	4	2	2
	Weld metal buildup	4	...	...	2	2
>12.7 mm (0.500 in.)	Fillet	4	...	4	2	2
	Attachment	4	...	4	2	2
	Weld metal buildup	2	2	...	2	2

4.2 Weld Procedure Qualification: Testing

Welding procedures that are to be used to weld onto in-service pressure components or pipelines shall address the probability of burn-through and hydrogen cracking susceptibility. The probability of burn-through should be evaluated experimentally, by computer simulation, or a combination of these methods. Hydrogen cracking susceptibility should be evaluated by destructive and nondestructive testing. When approved by the welding engineer or welding inspector, a welding procedure qualified to the applicable new construction code or post-construction code may be used for in-service welding applications. When required by the welding engineer or welding inspector, the welding procedure shall be qualified using the set-up outlined in Mandatory Appendix I and testing in para. 4.2. The essential variables for the welding procedure qualification shall be in accordance with an applicable code of construction or post-construction code and should include the in-service welding essential variables listed in para. 4.1.1.

4.2.1 Destructive Test Methods. In-service welding procedure test samples shall be taken from the procedure qualification weld coupon as specified in para. 4.2.2. The procedure shall be qualified by successful completion of the tests specified in paras. 4.2.1.1 through 4.2.1.4. The number of tests for each in-service welding procedure is given in Table 1. Two procedure qualification weld coupons should be fabricated if there is not enough material available for all of the test samples in one procedure qualification. The destructive test specimens shall be machined in accordance with AWS B4.0 or other applicable standard.

4.2.1.1 Macro-Section Test. The macro-section test samples shall be removed and machined using nonthermal methods. The macro-section test sample should be in accordance with ASTM E 3 or another equivalent document to give a clear representation of the weld region. Visual examination of the macro-section test samples shall show

(a) complete fusion

(b) no cracks

(c) no undercut exceeding 0.8 mm (0.031 in.) or 10% of the simulated in-service pressure components or pipeline wall thickness, whichever is smaller

(d) For fillet welding procedures only, the fillet weld leg lengths are at least equal to the leg length specified in the welding procedure or other applicable process control document.

4.2.1.2 Hardness Test. The hardness test samples shall be tested in accordance with ASTM E 384 or another equivalent document. A minimum of five Vickers hardness indents, using a 10-kg load, shall be made in the coarse-grained heat affected zone of the weld toe in accordance with Fig. 1. The macro-section test samples may be used for the hardness test samples after the metallographic analysis has been completed.

4.2.1.3 Nick-Break Test. Nick-break test samples shall be removed and machined using nonthermal methods, and shall be tested according to AWS B4.0 or another equivalent document. Visual inspection of the nick-break test sample fracture surfaces shall show

(a) complete fusion

(b) no single pore exceeds 1.6 mm (0.063 in.) in size, and the combined area of all pores does not exceed 2% of the exposed fracture surface area

(c) no slag inclusion exceeds 0.8 mm (0.031 in.) in depth and 3.2 mm (0.125 in.) or one-half the nominal pipe wall thickness in length, whichever one is smaller. The distance between adjacent slag inclusions shall not be less than 12.7 mm (0.500 in.).

(d) fisheyes, as defined in AWS A3.0, should not be cause for rejection

4.2.1.4 Face or Side Bend Test. The bend test samples shall be machined using nonthermal methods, and shall be tested according to AWS B4.0 or another equivalent document.[1] The bend test samples should be bent in a guided-bend test jig or equivalent equipment. For

[1] The simulated in-service pressure components or pipeline nick-break test sample for a fillet or attachment welding procedure can be used for the face bend test sample.

Fig. 1 Heat-Affected Zone Hardness Indent Locations

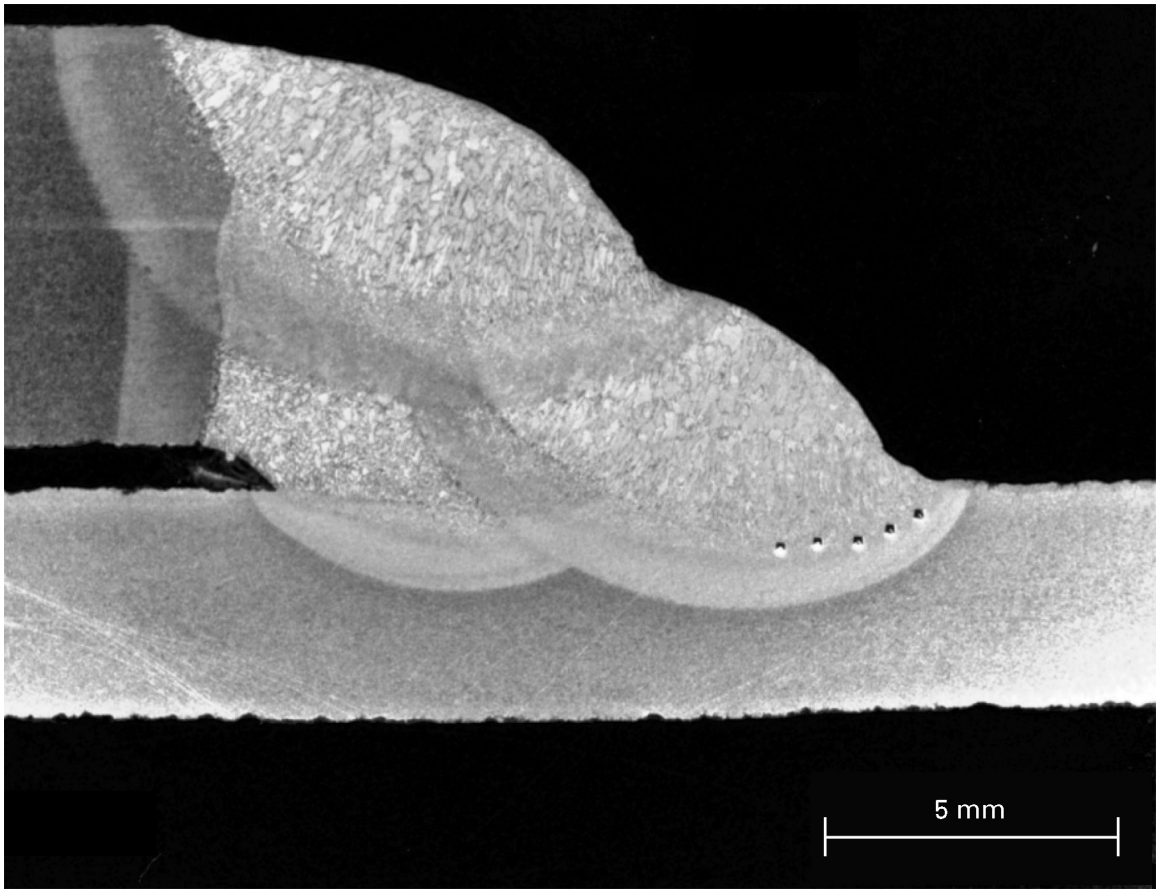

GENERAL NOTES:

(a) Indents are spaced 0.2 mm (0.008 in.) from fusion line and 0.6 mm (0.024 in.) apart. Initial indent is located 0.6 mm (0.024 in.) from weld toe.

(b) The figure is not to scale.

Fig. 2 Mandrel Location Relative to the Weld Toe When Doing Face Bend Test for a Typical In-Service Fillet Weld

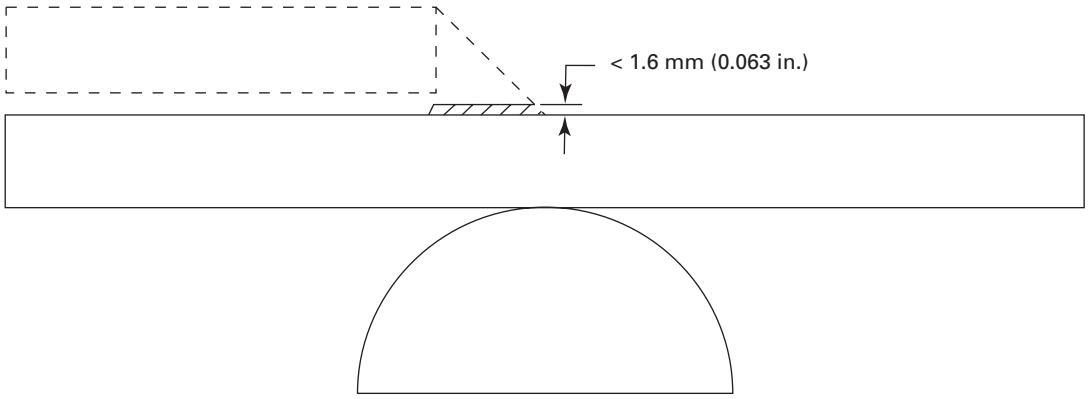

GENERAL NOTES:
(a) The dashed portion of the completed weld needs to be removed prior to testing.
(b) The figure is not to scale.

face bends, the bend test sample shall be placed with the face of the weld opposite the mandrel (Fig. 2). The weld reinforcement should be removed prior to bending. The remaining weld should not exceed 1.6 mm (0.063 in.). The bend test sample shall be bent until the curvature of the bend test specimen is approximately a U-shape (Fig. 3). Visual inspection of the bend test specimens shall show

(a) no cracks or other weld flaws exceeding 3.2 mm (0.125 in.) or one-half the nominal pipe wall thickness, whichever is smaller, in length are present in the weld or fusion zone

(b) cracks that originate from the edge of the bend test specimen that are less than 6.4 mm (0.250 in.) in length in any direction should not be cause for rejection unless an obvious weld flaw is present

4.2.2 Sample Location. The locations of the in-service welding procedure test samples for a fillet weld should be taken from equally spaced intervals around the procedure qualification weld coupon as shown in Fig. 4. The locations of the in-service welding procedure test samples for an attachment weld should be taken from equal spaced intervals around the procedure qualification weld coupon with samples taken from both the crotch and saddle portions of the weld as shown in Fig. 5. The locations of the in-service welding procedure test samples for a weld buildup weld coupon should be taken as shown in Fig. 6.

4.3 Welder Performance Qualification

Welders that are to perform in-service welding onto pressure components or pipelines shall demonstrate the ability to deposit welds that produce microstructures that are *not* crack susceptible and/or avoid burning through the pressure component or pipeline. This may be demonstrated by successfully depositing an in-service weld or by qualifying a welder using the set-up detailed in Mandatory Appendix I and testing requirements outlined in para. 4.2.

5 EXAMINATION

5.1 NDE Method

The in-service weld, made in the field, shall be examined after welding has been completed. The method of examination shall be in accordance with an applicable code of construction or post-construction code with the additional ability to locate weld flaws including hydrogen cracking since it is a major concern for in-service welding under the service conditions (e.g., operating temperature). The acceptance criteria for the NDE examination shall be in accordance with an applicable code of construction or post-construction code. If welding was done to repair a service induced defect, the NDE method that was used to detect the defect shall be used to verify removal of the defect.

When NDE procedures are applied after in-service welding, special procedures may be necessary where the components are operating at temperatures significantly above ambient.

5.2 Examination Time

When hydrogen cracking is a concern, in-service welds should be examined 24 hr to 72 hr after welding has been completed.

6 TESTING

Testing should be completed in accordance with an applicable code of construction or post-construction code. If hydro-testing of a hot-tapping component after

Fig. 3 Examples of In-Service Welding Procedure Qualification Face Bend Test Samples

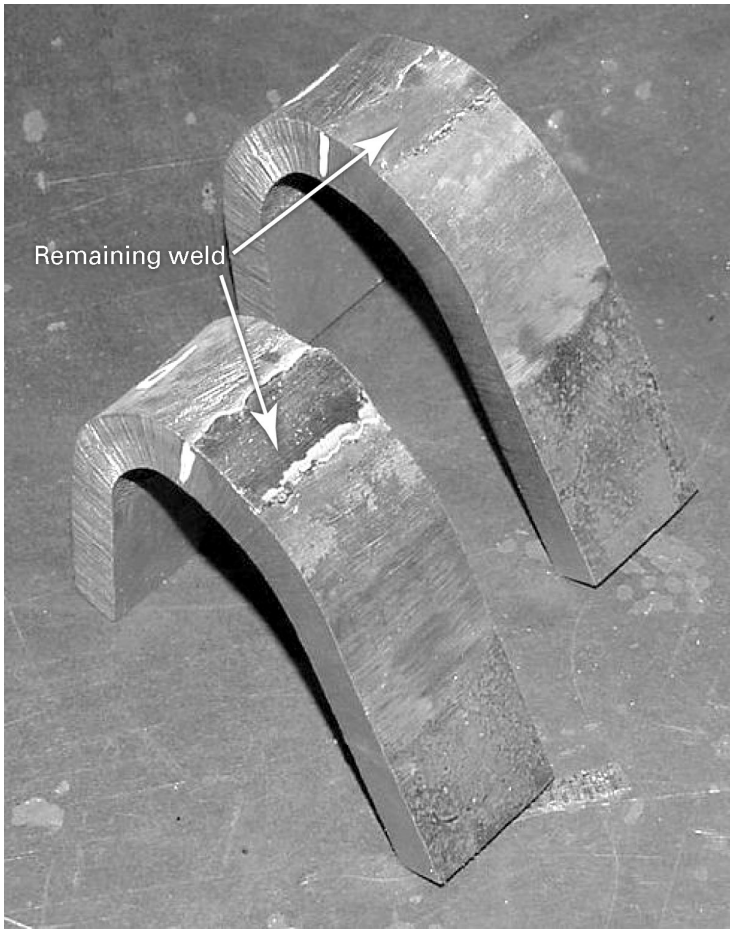

Fig. 4 Test Sample Locations for In-Service Fillet Welding Procedure Qualification Assuming Equal Spacing Around the Circumference to Obtain All the Required Test Specimens

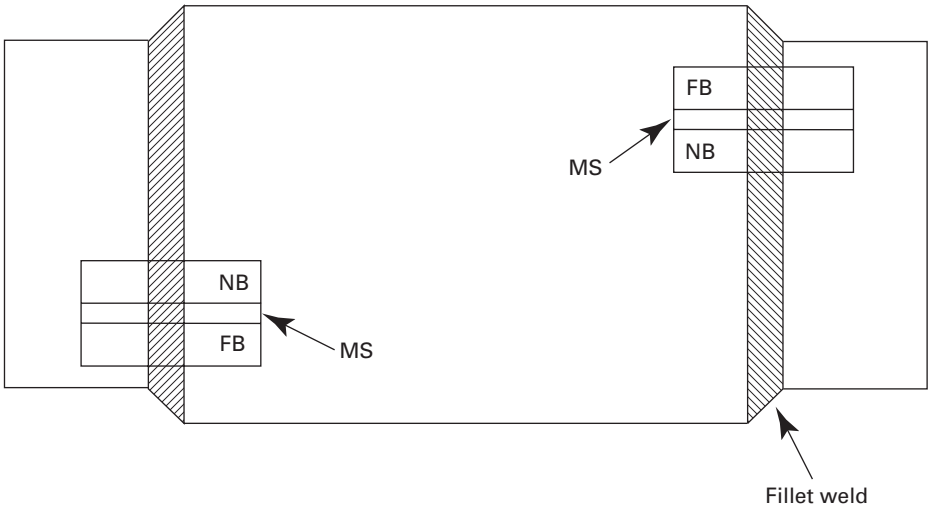

GENERAL NOTES:
(a) NB = nick-break test sample; FB = face bend test sample; MS = metallographic test sample
(b) Not to scale.

Fig. 5 Test Sample Locations for In-Service Attachment Welding Procedure Qualification Assuming Equal Spacing Around the Circumference to Obtain All the Required Test Specimens

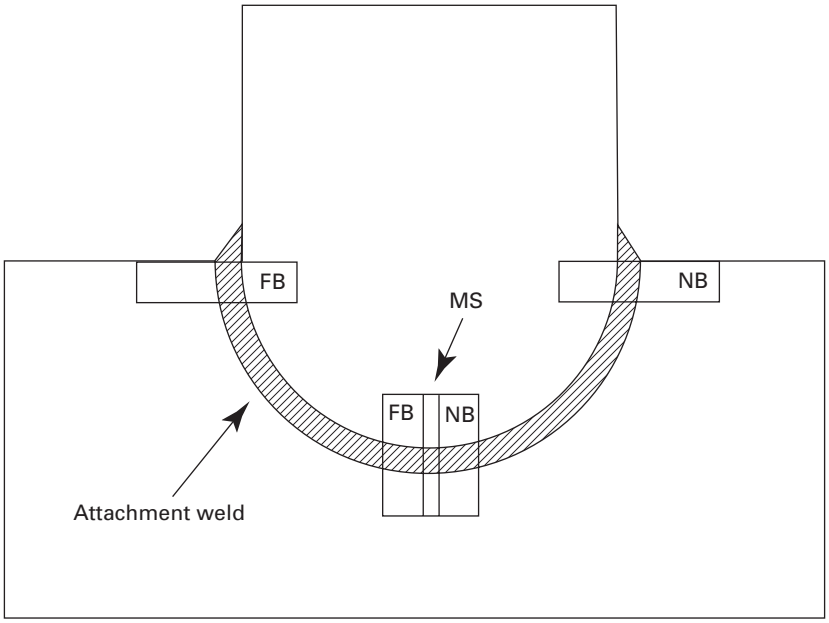

GENERAL NOTES:
(a) NB = nick-break test sample; FB = face bend test sample; MS = metallographic test sample
(b) Not to scale.

installation is contemplated, the user is advised to consider the temperature of the operating component in order to avoid having the test fluid flash to steam.

7 REFERENCES

AGA Pipeline Repair Manual, December 31, 1994

Publisher: American Gas Association (AGA), 400 North Capitol Street NW, Suite 450, Washington, DC 20001

API Recommended Practice 2201, Safe Hot Tapping Practices in the Petroleum & Petrochemical Industries

API Recommended Practice 579-1

API/ASME FFS-1, Fitness-For-Service

API Standard 1104, Welding of Pipelines and Related Facilities

Publisher: American Petroleum Institute (API), 1220 L Street NW, Washington, DC 20005-4070

ANSI/AWS A3.0, Standard Definitions; Including Terms for Adhesive Bonding, Brazing, Soldering, Thermal Cutting, and Thermal Spraying

ANSI/AWS B4.0, Standard Methods for Mechanical Testing Welds

ANSI/NB-23-2007, National Board Inspection Code

Publisher: American National Standards Insititue (ANSI), 25 West 43rd Street, New York, NY 10036

ASME B31.1, Pressure Piping

ASME B31.3, Process Piping

ASME B31.4, Pipeline Transportation Systems for Liquid Hydrocarbons and Other Liquids

ASME B31.8, Gas Transmission and Distribution Piping Systems

ASME Boiler and Pressure Vessel Code, 2007 Edition, Section IX, Welding and Brazing Qualifications; Article II — Welding Procedure Qualifications: Article III — Welding Performance Qualifications

Publisher: The American Society of Mechanical Engineers (ASME), Three Park Avenue, New York, NY 10016-5990; Order Department: 22 Law Drive, P.O. Box 2300, Fairfield, NJ 07007-2300

ASTM E 3, Standard Practice for Preparation of Metallographic Specimens

ASTM E 384, Standard Test Method for Microindentation Hardness of Materials

Publisher: ASTM International (ASTM), 100 Barr Harbor Road, P.O. Box C700, West Conshohocken, PA 19428-2959

CSA Standard Z662, Oil and Gas Pipeline Systems

Publisher: Canadian Standards Association (CSA), 5060 Spectrum Way, Mississauga, Ontario L4W 5N6, Canada

Fig. 6 Test Sample Locations for In-Service Weld Metal Buildup Welding Procedure Qualification

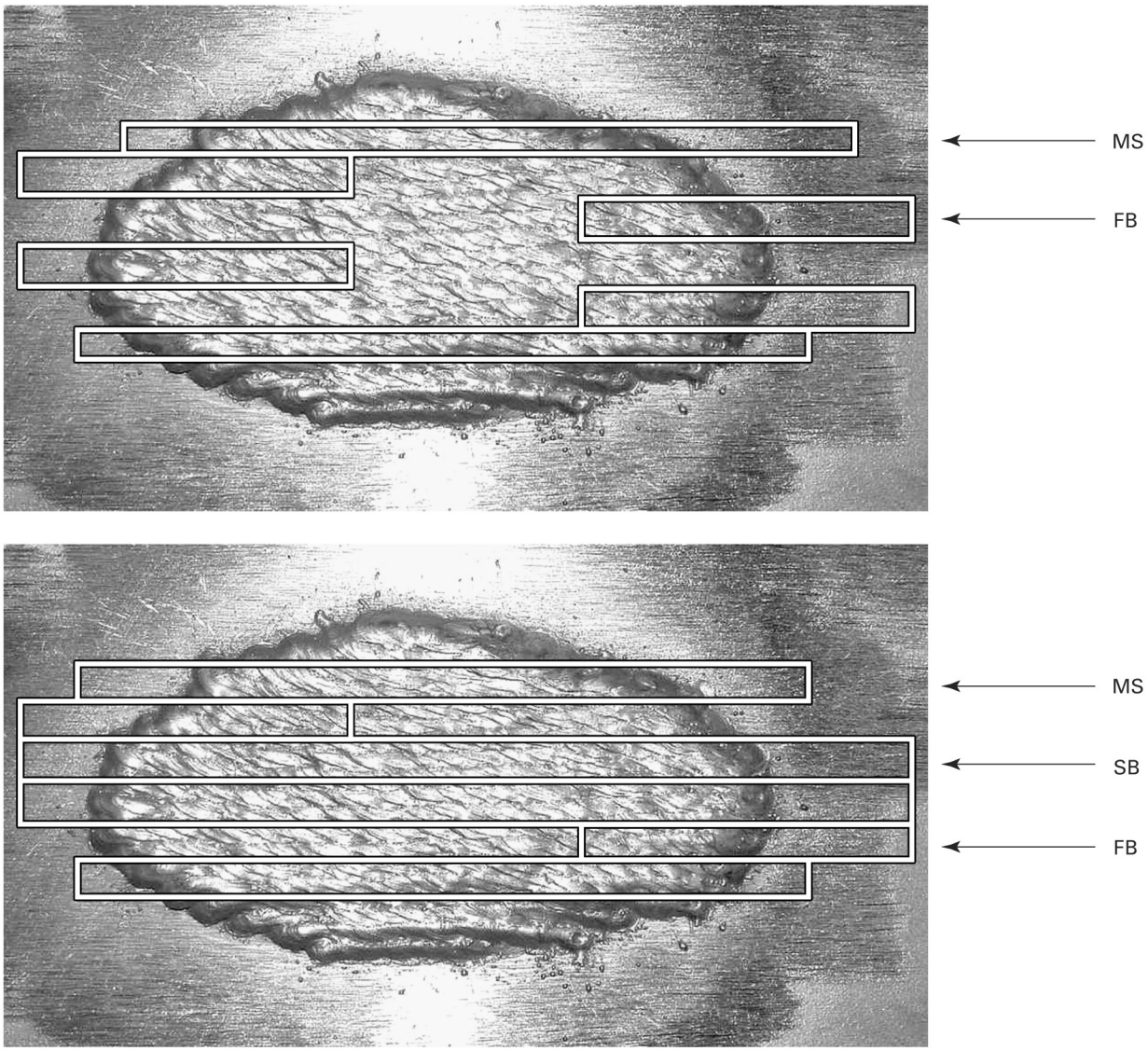

GENERAL NOTES:
(a) SB = side bend test sample; FB = face bend test sample; MS = metallographic test sample.
(b) The figure is not to scale.

Article 2.10, Mandatory Appendix I
In-Service Welding Procedure/Welder Performance Qualification Setup

The intent of producing a simulated in-service welding procedure qualification is to make welds that will be more likely to produce hydrogen cracking during the qualification than in the field. This can be done by making welds on higher carbon equivalent carbon steel, by using a higher cooling potential, or by incorporating both variables to have a more conservatively qualified procedure.

The simulated in-service setup used for the in-service procedure qualification can be any applicable joint configuration, but it is imperative that the in-service procedure qualification weld coupon be more susceptible to hydrogen cracking. It is good practice to simulate the actual field weld that will be made using the in-service welding procedure. It is common for the in-service production qualification weld to be made using a higher carbon equivalent carbon steel pipe with water backing because water has been shown to cool welds faster than any other cooling medium. It is important to note that using water as the cooling medium may make the welding procedure overly conservative to the point of making it impossible to successfully qualify the weld coupon.

The in-service procedure qualification coupon should have sufficient length to remove all of the required test specimens. More than one assembly may be used if all the required specimens cannot be removed from a single assembly. The cooling medium should be circulated through the test assembly prior to welding. The simulated in-service setup should be prepared as follows:

(a) The simulated in-service setup for an in-service fillet weld should be prepared in a manner similar to Fig. I-1 or an alternative position that would simulate the in-service welding application. The sleeve should have a close fit to the carrier pipe unless a special design sleeve fitting is to be qualified. The sleeve longitudinal groove welds should be welded prior to the in-service fillet welds to improve fit-up [see Note to Fig. I-1].

(b) The simulated in-service setup for an in-service attachment weld should be prepared in a manner similar to Fig. I-2 or an alternative position that would simulate the in-service welding application. The tack welds should be ground to assure complete fusion along the entire length of the weld. No test samples shall be taken from the tack locations.

(c) The simulated in-service setup for an in-service weld metal buildup weld should be prepared in a manner similar to Fig. I-1 but without using the sleeve. The weld will be deposited directly onto the pipe wall. It is common to mechanically remove a specified amount of wall to simulate corrosion loss. The probability of burn-through shall be evaluated before weld metal buildup is performed using the qualified procedure in the field.

After completion of the procedure qualification weld, the cooling medium shall continue until the entire assembly has achieved a uniform equilibrium temperature.

Fig. I-1 Procedure and Welder Qualification Test Assembly for an In-Service Fillet Weld

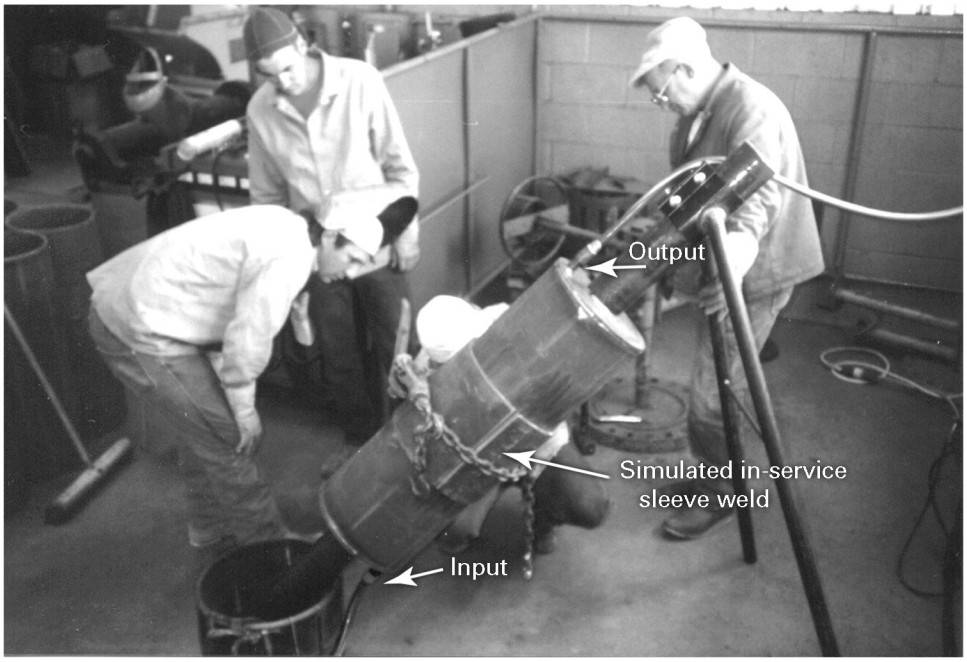

GENERAL NOTE: The longitudinal weld seam is not considered an in-service weld unless the longitudinal seam weld fuses to the simulated in-service pipe.

Fig. I-2 Procedure and Welder Qualification Test Assembly for an In-Service Attachment Weld

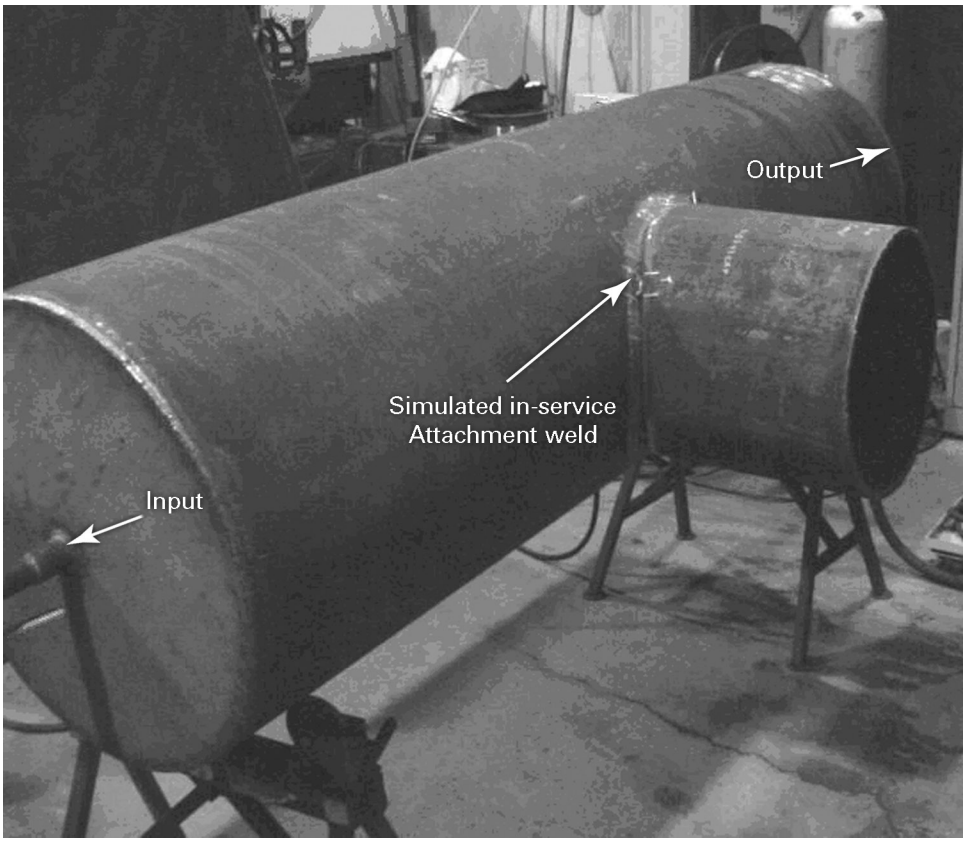

Article 2.11
Weld Buildup, Weld Overlay, and Clad Restoration

(08)

1 DESCRIPTION

1.1 Introduction

This Article addresses the repair and restoration by weld buildup or weld overlay of carbon steel base metal, low alloy steel base metal, and corrosion resistant cladding or weld overlay on internal surfaces of pressure vessels and piping that have experienced wall thinning.

1.2 Scope

Repairs to weld overlay or cladding can involve replacement of the entire thickness of the cladding or weld overlay, or a partial thickness of the weld overlay.

1.3 Damaged Base Metal

In carbon steel or low alloy steel applications, weld overlay or weld buildup can be used to rebuild areas that are worn from erosion, corrosion, or flow-accelerated corrosion (FAC), or which have been ground out to remove defects such as cracks. The original pressure boundary integrity of the base metal can be restored.

1.4 Damaged Weld Overlay and Cladding

Corrosion resistant weld overlay can be used to replace damaged areas that originally had similar overlay, or that originally had corrosion resistant cladding over carbon steel or low alloy steel material. Corrosion resistant weld overlay can also be used to back-clad seams that have been repaired on clad material with carbon steel or low alloy steel base metal.

1.5 Definitions

1.5.1 Weld Overlay. For the purpose of this Article, weld overlay refers to the application of corrosion resistant weld metal on carbon steel or low alloy base metal.

1.5.2 Weld Buildup. Weld buildup refers specifically to the application of carbon steel or low alloy weld metal, applied for the purpose of restoring base metal thickness.

1.5.3 Clad Restoration. Clad restoration refers to the application of corrosion resistant weld metal on carbon steel or low alloy base metal, for the purpose of restoring the original corrosion resistant weld overlay or cladding. The original cladding could have been applied by methods such as roll bonding or explosion bonding.

1.5.4 Back Cladding. Back cladding refers to the application of corrosion resistant weld metal on a carbon steel or low alloy steel weld in clad material which has been repaired.

1.5.5 Effective Depth. The depth below the finished weld surface at which weld metal chemical analysis is performed. For the purpose of this Article, the effective depth is as defined in ASME BPVC Section IX, QW-462.5(a).

2 LIMITATIONS

2.1 Additional Requirements

Part 1 of this Standard, Scope, Organization, and Intent, contains additional requirements and limitations. This Article shall be used in conjunction with Part 1.

2.2 Base Metal Condition

This Article shall apply to wall thinning and does not specifically address other types of surface defects. See Article 3.4, "Flaw Excavation and Weld Repair" for other types of surface defects. The remaining base metal thickness shall be adequate to accommodate weld buildup.

3 DESIGN

3.1 Cause of Damage

Prior to repair welding, determination should be made of the causes of the damage to the weld overlay, cladding, or base metal. The use of weld overlay or weld buildup as a permanent repair should include consideration of the thinning mechanism and its prevention. Consideration should be given to replacement of all or part of the weld overlay in case there is damage to the cladding or weld overlay (corrosion, embrittlement and cracking, etc.).

3.2 Number of Weld Layers

Weld overlay or back cladding may be deposited in one or more layers. More than one layer is required where temper-bead techniques are used. The number of weld layers in production shall not be less than the number of layers deposited for weld overlay procedure qualification tests.

3.3 Weld Thickness

The "total depth" of overlay or back cladding shall be 3 mm ($\frac{1}{8}$ in.) or greater in thickness, unless otherwise

specified. In all cases, the weld overlay thickness and the base metal thickness shall at least equal the minimum thickness of the undamaged metal.

3.4 Multiple-Layer Welding

If multiple-layer overlay or back cladding is required to meet the specified chemistry, and subsequent machining or grinding is necessary to satisfy dimensional requirements, the final machined or ground overlay thickness shall not be less than the qualified thickness. Examples include machining of gasket grooves in flanges and tubesheets or grinding of heat exchanger shell inside diameter to permit insertion of tube bundle.

3.5 Base Metal Restoration

When the strength of the original base metal is to be restored by weld buildup, the weld metal tensile strength should equal or exceed that of the base metal. Consideration should also be given to compatibility of the weld metal with the base metal and suitability for the intended service.

3.6 Corrosion Protection

Where weld overlay is applied for corrosion protection, such as stainless steel overlay on carbon steel or low alloy base metal, appropriate weld chemistry (such as Type 309 followed by Type 308 filler metal) should be specified.

3.7 Design Calculations

All design calculations should be in accordance with the original code of construction. If overlay or cladding is included in the thickness calculations, the calculations shall be in accordance with the original code of construction or, when none exists, they may be based on ASME BPVC Section VIII, Division 1, UCL-23.

3.8 Other Considerations

3.8.1 Differential Thermal Expansion. Consideration should be given to differential thermal expansion between the base metal and weld overlay.

3.8.2 Galvanic Corrosion. The possibility of galvanic corrosion should be considered in the base metal at the edge of high alloy or nonferrous weld overlay.

4 FABRICATION

4.1 Surface Preparation

Surfaces to be welded shall be free of rust, scale, paint, coatings, and other contaminants, and shall have a smooth contour. If surfaces are to be prepared by blasting, media should be free of silica that would interfere with subsequent welding operations.

4.2 Welding Procedure Qualification

Welding procedures, welders, and welding operators shall be qualified in accordance with the current requirements of the applicable code of construction or post-construction code. If not otherwise specified, ASME BPVC Section IX may be used for procedure and performance qualifications. Typically, semiautomatic welding processes such as GMAW are used to maximize productivity and to minimize heat input. For larger areas to be welded, machine approaches using welding equipment mounted on tracks for better control and productivity rates may be appropriate.

4.3 Weld Overlay

4.3.1 Heat Input. Application of the first overlay pass in thin shells shall be such that penetration, and thus the potential for burn-through, is minimized. In general, heat input shall be minimized to prevent burn-through and distortion.

4.3.2 Weld Overlay Thickness. Weld overlay thickness shall be verified by actual measurement of the exposed edge at weld joint preparations or repair cavities. Questions regarding overlay thickness should be resolved by thickness measurements. Consultation with an NDE specialist may be necessary.

4.4 Back Cladding

4.4.1 Weld Groove Preparation. (Typical weld joint details for back cladding are shown in Fig. 1.)

Prior to back cladding butt joints, the weld groove in the backing material shall be filled approximately flush with, but not more than 1.5 mm ($\frac{1}{16}$ in.) below the weld overlay fusion line or the clad bond line adjacent to the weld groove prior to back cladding. Care shall be taken to avoid cross-contaminating the cladding and backing material weld metal. Any suspected areas of cross-contamination shall be etched with either a nitric acid or copper sulfate solution to confirm the location of the clad/substrate interface.

4.4.2 Strip Back. Prior to back cladding butt joints, cladding shall be stripped back a minimum of 6 mm ($\frac{1}{4}$ in.) from the edge of the plate, pipe, or fitting.

4.5 Special Considerations for Low Alloy Steels

4.5.1 Dehydrogenation Heat Treatment. Prior to any repairs being performed, consideration should be given to the need for a dehydrogenation heat treatment of vessels or parts that have been exposed to products or processes containing hydrogen to avoid hydrogen cracking during repairs. Dehydrogenation heat treatment may be performed as outlined within API RP 934.

4.5.2 Embrittlement. Some materials may have been exposed to service conditions that cause embrittlement of these materials. Consideration should be given to the

Fig. 1 Weld Seam With Back Cladding

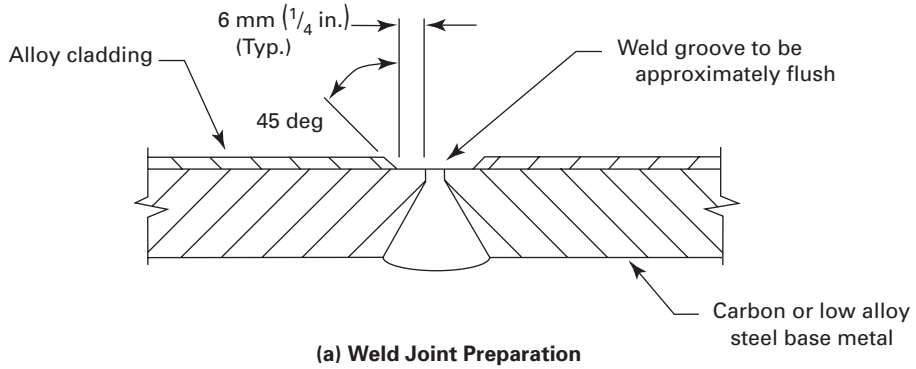

(a) Weld Joint Preparation

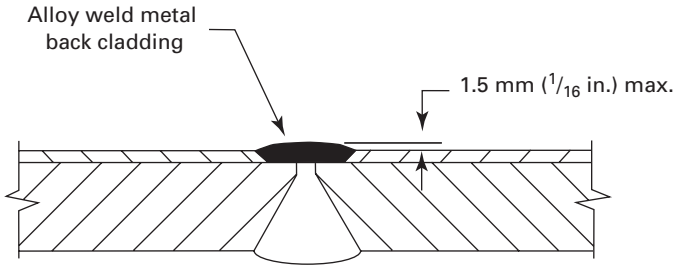

(b) Finished Weld Seam With Back Clad

prior service conditions and the potential damage in materials resulting from these service conditions. This may require special welding procedures and techniques to minimize the risk of cracking during welded repairs. For example, the use of welding procedures that provide controlled deposition and low welding heat input reduce the risk of cracking in embrittled base metals during welding repairs.

4.5.3 Intermediate PWHT. After performing weld repairs to low alloy steel base metal, but before application of weld overlay (if applicable), a dehydrogenation heat treatment or an intermediate PWHT should be considered, especially if the base metal is 2¼ Cr or higher alloy, or heavy wall (greater than 38 mm or 1½ in. thick).

4.5.4 Hardness and Toughness. Consideration should be given to the maximum hardness and toughness needed in weld metal and in base metal heat-affected zones for the intended service.

4.6 Surface Profile

Finished surfaces should be free of undercut, notches, sharp ridges, and abrupt surface changes. Grinding may be required to eliminate irregularities or pits.

4.7 Heat Treatment

4.7.1 General. Heat treatment shall be performed in accordance with the applicable code of construction, post-construction code, or owner-user specification. As an alternative to heat treatment, and if allowed by the applicable code of construction or post-construction code and approved by the owner, consideration may be given to the use of alternatives such as temper bead welding procedures.

4.7.2 Prior PWHT. Consideration should be given to the effect of any prior postweld heat treatments (PWHT) and any additional PWHT for welded repairs on cladding and on strength and toughness of the base metal and welded joints.

4.7.3 Low Alloy Steels. In case of repairs to the cladding or weld overlay on low alloy steels (e.g., Cr-Mo), the repaired area may be subjected to final PWHT any time after the deposition of 5 mm (3/16 in.) of the first layer of the corrosion resistant weld deposit (unless another depth is qualified). Final PWHT may be performed either before or after the deposition of additional layers of overlay since only the first layer

of weld deposit will cause a HAZ in the base metal. Subsequent layers of welding would not be expected to create a new HAZ in the base metal.

5 EXAMINATION

5.1 General

5.1.1 Nondestructive Examination Before Welding. Consideration should be given to the need for nondestructive examination of surfaces to be welded. An appropriate method such as magnetic particle or liquid penetrant may be utilized to ensure that all defects have been removed before the welding. Any unacceptable indications that are discovered shall be removed in accordance with Article 3.4, "Flaw Excavation and Weld Repair," of this Standard prior to application of weld overlay. The acceptance criteria shall be in accordance with the applicable code of construction or post-construction code.

5.1.2 Nondestructive Examination After Welding. Consideration should be given to the need for nondestructive examination of surfaces repaired by welding. Surface examination methods such as magnetic particle, liquid penetrant, ultrasonic, or surface eddy current may be utilized in accordance with the applicable code of construction or post-construction code. Welds on base metal over 9.5 mm ($^3/_8$ in.) thick should be examined by volumetric examination methods such as radiographic or ultrasonic testing. The acceptance criteria shall be in accordance with the applicable code of construction or post-construction code.

5.2 Copper Sulfate Solution Testing

After removal of any damaged stainless steel weld overlay, and prior to applying new weld metal, carbon steel surfaces should be examined with copper sulfate solution to verify complete removal of stainless steel. (See ASTM A 380 for copper sulfate testing).

5.3 Liquid Penetrant Examination of Weld Overlay and Back Cladding

5.3.1 Multiple-Layer Welds. For multiple-layer weld overlay or back cladding, liquid penetrant examination should be performed on the first layer of the weld overlay.

5.3.2 Finished Surfaces. The final surface of weld overlays, back cladding, and welds joining attachments to weld overlays or integral cladding should be liquid penetrant examined to an appropriate extent.

5.3.3 Examination and Acceptance Standards. Examination and acceptance standards shall be in accordance with the applicable code of construction or post-construction code. If no standard is specified by the applicable code of construction or post-construction code, the examination may be conducted in accordance with ASME BPVC Section V, and acceptance criteria may be in accordance with Appendix 8 of ASME BPVC Section VIII, Division 1. Defective areas shall be repaired and reexamined.

6 TESTING

6.1 Chemical Analysis

6.1.1 Procedure Qualification. The chemical composition at the "effective depth" of the overlay or back cladding should be included in welding procedure qualification tests.

6.1.2 Production Welding. Alternatively, the chemical composition at the "effective depth" of the overlay or back cladding shall be reported for production welding, when specified by the owner. The acceptance criteria for production overlay and back cladding shall be in accordance with the owner's specification except as noted in this document.

6.1.3 Extent of Chemistry and Ferrite Testing

(a) The number of samples for chemical analysis for all types of weld overlay and back cladding, and number of ferrite measurements for austenitic stainless steel deposits, shall be as specified by the owner. When required, test samples should be removed, or in situ tests should be conducted, prior to final PWHT (if applicable) at locations selected by the field inspector. Testing after PWHT is not required unless otherwise specified by the owner.

(1) For machine weld overlay, one sample or test from each girth weld and component (such as head, tubesheet, connection, etc.), and each back-clad seam is recommended. For manual weld overlay, two samples or tests from each girth weld and equipment component (such as head, tubesheet, connection, etc.), and each back-clad seam are recommended.

(2) For back-clad seams ≤ 600 mm (24 in.) in diameter, one sample for each 24 diametral-inch, or part thereof, is recommended. The 24 diametral-inch measurement is cumulative for all back-clad seams 600 mm (24 in.) diameter and smaller employing the same welding procedure, process, and filler metal.

EXAMPLE: One 20 in. manway and three 8 in. nozzles ≅ 44 diametral-inches; or one 500 mm manway and three 200 mm nozzles ≅ 1 100 mm diameter measurement. Therefore, two tests are required.

(b) For repetitive manual, semi-automatic, and automatic weld overlay operations on components > 600 mm (24 in.) diameter, two tests per welder per week may be substituted for the requirements of (a)(1) above. However, there shall be no change in welding procedure, filler metal classification, batch number of submerged arc or electroslag flux, or welding position. Authorization shall be at the discretion of the owner.

6.2 Chemical Composition of Austenitic Stainless Steel Weld Deposits

The chemical analysis shall be within the range specified in the original code of construction, or in ASME BPVC Section II, Part C.

6.3 Ferrite Testing of Austenitic Stainless Steel Weld Deposits

Suggested requirements for austenitic stainless steel ferrite numbers are as follows:

(a) The ferrite content of the deposited weld overlay or back cladding at the effective depth (as defined in section 1 of this Article) should be as follows:

(1) For Type 304, 304L, 316, 316L, and 317L, the FN range should be 4 to 10.

(2) For Type 347, the FN range should be 3 to 10.

(b) The ferrite content should be determined by one of the following:

(1) The actual, as-deposited chemical composition and the WRC-1992 Constitution Diagram

(2) Magnetic instrument as listed in AWS A4.2/A4.2M.

6.4 Calibration of Magnetic Ferrite Testing Gages

(a) Magnetic gages should be calibrated and certified per AWS A4.2/A4.2M. An annual calibration certification should be available to the inspector. Prior to use in production, instrument calibration should be verified on at least two standards (calibration test blocks) with a minimum ferrite spread of 5 FN. At least one of these standards should have a FN of 4 to 10.

(b) These standards should be one of the following:

(1) primary or secondary weld metal standards described in AWS A4.2/A4.2M

(2) samples with certified chemical analyses referenced to the WRC-1992 (FN) Diagram or the DeLong (FN) Diagram

(3) samples with ferrite content measured by metallographic techniques

6.5 Ferricyanide Testing of Ni–Cu (Alloy 400) and Cu–Ni Alloys

(a) Ferricyanide testing should be performed on all nickel–copper [Alloy 400 (Monel), 67Ni–30Cu] and copper–nickel (70Cu–30Ni, 90Cu–10Ni) alloy overlays and back cladding.

(b) Ferricyanide tests should be performed on 100% of finished nickel–copper or copper–nickel overlays and back cladding deposits. The results should not indicate the presence of free iron.

The suggested test procedure is as follows:

(1) The surface to be examined should be prepared by a method that does not cause contamination by free iron. A solvent or detergent solution should remove oil, grease, and dirt. A pickling solution may be used to remove oxides. The surface should be thoroughly rinsed after pickling or detergent cleaning, using distilled or de-ionized water. If mechanical surface preparation is required, new emery paper or grinding wheels, and nonferritic buffing wheels and brushes should be used.

(2) Suggested composition of the test solution is as follows:

(a) 90% by volume potassium ferricyanide (4% solution)

(b) 10% by volume solution consisting of 1 part concentrated hydrochloric acid (36% to 38% by weight HCl) and 9 parts distilled water

(3) Fresh test solution should be prepared immediately before application.

(4) The testing solution's reaction should be checked on samples of nickel–copper or copper–nickel and carbon steel. A blue color should appear immediately on carbon steel. No color should appear on nickel–copper or copper–nickel within 10 min. If color does appear, the solution is too acidic, and new solution should be formulated.

(5) Solution should be applied to the tested surface by spraying (using an atomizer) or drop-by-drop (using an eyedropper). Appearance of a definite blue color within 2 min indicates the presence of free iron. A light blue tint should be considered insignificant.

(6) Questions regarding determination of iron content based on the degree of blueness should be resolved by spot chemical analysis. The iron content should not exceed 6%.

6.6 Hydrostatic Testing

The inspector should be consulted to establish the need for hydrostatic testing of equipment after repairs are complete. Pressure testing is generally not needed for weld buildup and restoration type repairs, but if specified, should be in accordance with the code of construction or post-construction code.

7 REFERENCES

ANSI/NB-23-2007, National Board Inspection Code

Publisher: American National Standards Institute (ANSI), 25 West 43rd Street, New York, NY 10036

API RP 582, Welding Guidelines for the Chemical, Oil and Gas Industries

API RP 934, Materials and Fabrication Requirements for 2¼Cr-1Mo and 3Cr-1Mo Steel Heavy Wall Pressure Vessels for High Temperature, High Pressure Hydrogen Service

Publisher: American Petroleum Institute (API), 1220 L Street, Washington, DC 20005-4070

ASME Boiler and Pressure Vessel Code, 2007 Edition, Section II, Part C — Specifications for Welding Rods, Electrodes, and Filler Metals

ASME Boiler and Pressure Vessel Code, 2007 Edition, Section V — Nondestructive Examination
ASME Boiler and Pressure Vessel Code, 2007 Edition, Section VIII, Division 1 — Rules for Construction of Pressure Vessels
ASME Boiler and Pressure Vessel Code, 2007 Edition, Section IX — Welding and Brazing Qualifications
Publisher: The American Society of Mechanical Engineers (ASME), Three Park Avenue, New York, NY 10016-5990; Order Department: 22 Law Drive, P.O. Box 2300, Fairfield, NJ 07007-2300

ASTM A 380, Standard Practice for Cleaning, Descaling, and Passivation of Stainless Steel Parts, Equipment, and Systems
Publisher: American Society for Testing and Materials (ASTM International), 100 Barr Harbor Road, P.O. Box C700, West Conshohocken, PA 19428-2959

AWS A4.2/A4.2M:2006 (ISO 8249:2000), Standard Practice for Calibrating Magnetic Instruments to Measure the Delta Ferritic Content of Austenitic and Duplex Ferritic-Austenitic Stainless Steel Weld Metal

Publisher: American Welding Society (AWS), 550 NW LeJeune Road, Miami, FL 33126

Repairs of Deaerators

Publisher: Electric Power Research Institute (EPRI), 3420 Hillview Avenue, Palo Alto, CA 94304

WRC Bulletin 412, Repair of a 2¼Cr-1Mo Petrochemical Reactor
WRC-1992, Constitution Diagram for Stainless Steel Weld Metals; Kotecki, D.J. and Siewert, T.A.

Article 2.12
Fillet Welded Patches

(08)

1 DESCRIPTION

(a) This repair method describes the selection criteria, application limitations, design, fabrication, examination and testing of fillet welded surface patches to pressure retaining components. Similar fillet welded surface patch repair methods with reinforcing plug welds are provided in another Article of this Standard.

(b) This repair method consists of fitting a repair plate to closely match the original component's exterior or interior surface. The repair plate is sized to cover the areas exhibiting damage, both at the time of repair and that anticipated for the repair's design life.

(c) The repair method is typically applied to pressure retaining shells that have suffered local wall thinning (including through-wall) due to erosion, corrosion and other local damage mechanisms.

(d) This repair method is applicable to cylindrical, spherical, flat, and conical shells as well as other pressure components.

(e) This repair method is generally suitable for service temperatures above the nil-ductility temperature of the materials of construction up to a maximum design temperature of 345°C (650°F). Use of this repair method for lower temperatures requires evaluation of notch toughness, nonductile fracture and other applicable low temperature effects. Use of this repair method for higher temperatures requires evaluation of thermal fatigue, creep, and other applicable high temperature effects.

(f) Figure 1 shows a typical application on a vessel with a nearby structural discontinuity (in this case a nozzle). The plan view on top shows two of many possible repair patch configurations, which are generally rectilinear in shape with rounded corners. The bottom sectional view shows the curvature matching aspect of each repair plate.

2 LIMITATIONS

(a) Part 1 of this Standard, Scope, Organization, and Intent, contains additional requirements and limitations. This Article shall be used in conjunction with Part 1.

(b) This repair method is not limited by the component size. However, a sleeve type repair may be more suitable for those applications where axisymmetric behavior is important.

(c) This repair method shall not be used for lethal service applications or where the damage mechanism, the extent of damage, or likely future damage cannot be characterized. This repair method may be used in certain cases on areas with local crack-like flaws provided

(1) the growth has stopped, been arrested, or can be accurately predicted for all propagation modes, and

(2) the effect of the flaw is evaluated using detailed analyses.

3 DESIGN

3.1 General

(a) The design approach for this repair method is based in part on standard pressure component design calculations, such as those in the ASME BPV Code, Section VIII, Division 1. The application limitations imposed in section 2 apply to the governing load case resulting from internal pressure where the resultant stress is membrane stress. However, if the component to be repaired is subject to bending, torsion, wind loads, or to fatigue, the design shall include evaluation of these conditions using appropriate methods of analysis. In all cases, an engineering analysis shall be performed.

(b) In general, the patch material and welding filler metal should be the same or very similar (e.g., compositional, physical, and mechanical properties) to that of the pressure component's original construction. Repair material selection shall consider, as a minimum, characteristics such as chemistry, weldability, physical properties (such as coefficient of thermal expansion), mechanical properties (such as strength, ductility, notch toughness), and compatibility with the process medium.

(c) The thickness of the patch plate is dependent on material mechanical properties and the calculated attachment weld sizes.

(d) The size (length and width) of the patch plate is governed by the requirement that all attachment welds be located on sound base metal completely encompassing the damaged area(s) (see Fig. 1). The repair plate shall also be large enough to encompass any additional area(s) anticipated to experience similar or related damage during the life of the repair. The patch plate should overlap sound base metal by at least 25 mm (1 in.).

(e) This repair method is generally used on the outside surface of components subject to internal pressure. For applications under external pressure, a separate

Fig. 1 Typical Shell Repair Near Discontinuity

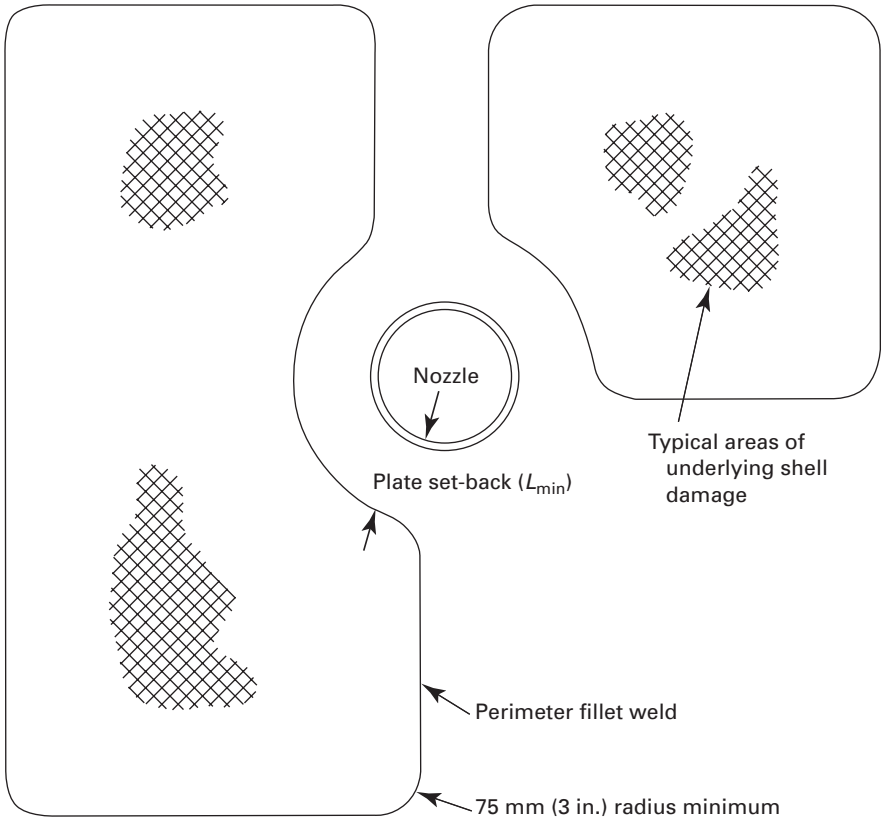

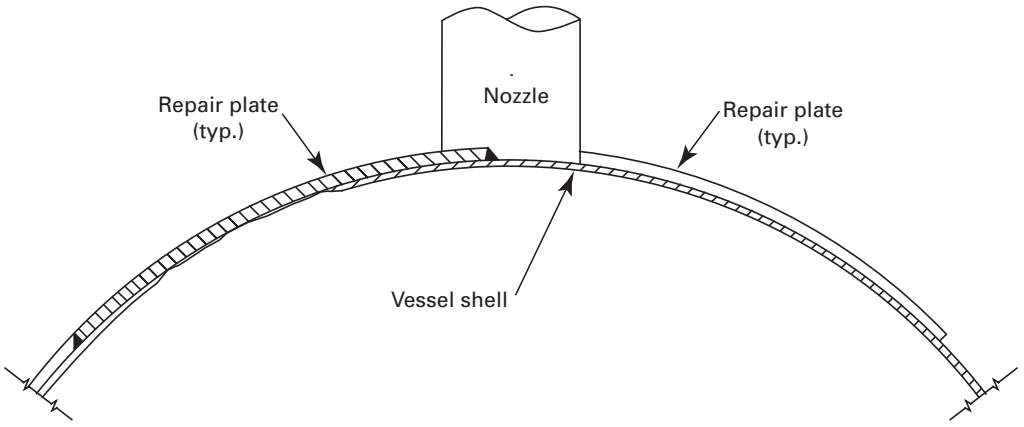

analysis to evaluate buckling and other instability considerations shall be performed.

(f) In assessing the applicability and service life of this repair method, consideration shall be given to material compatibility, future operating conditions, thermal and shrinkage effects of welding, the introduction of crevices and structural discontinuities, thermal transients and temperature differentials between the patch plate and the component, and other application limits such as examination and testing constraints. If the damage to be patched is, or is expected to be, through-wall, the effects of fluids (e.g., entrapment, concentration, corrosion, etc.) that may accumulate between the vessel and the patch plate shall be assessed. If this repair method is to be implemented during component operation, additional precautions may need to be taken for personnel safety.

(g) The design may consider the combined strength of the patch plate (considering also the strength of the fillet weld joints, including joint efficiency) and the underlying shell. Consideration may also be given to excess thickness available adjacent to the damaged shell using applicable code area replacement rules for nozzles. No credit shall be taken for material required for future corrosion allowance.

3.2 Internal Pressure Loads

(a) For cylindrical components subject to internal pressure loads, applied forces on the repair patch shall be determined as follows:

(1) Circumferential Load. Unit forces in hoop direction:

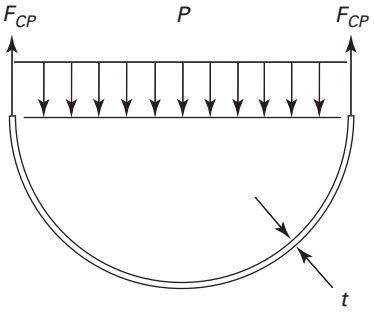

$$F_{CP} = \frac{PD_m}{2} \quad (1)$$

where

D_m = diameter at mid-wall of component, mm (in.)
F_{CP} = circumferential force due to internal pressure, N/mm (lb/in.)
P = internal design pressure, kPa (psi)

(2) Longitudinal Load. Unit forces in longitudinal direction:

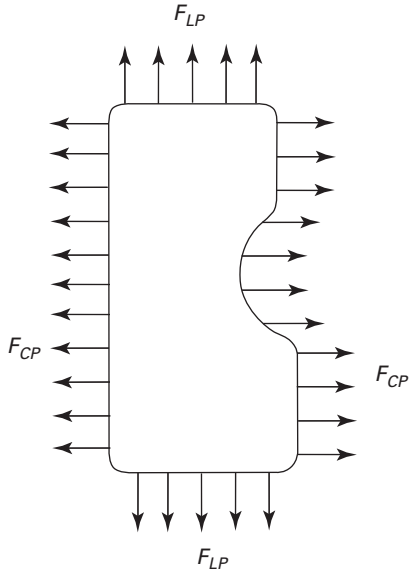

$$F_{LP} = \frac{PD_m}{4} \quad (2)$$

where

F_{LP} = longitudinal force due to internal pressure, N/mm (lb/in.)

(b) If other loads are applicable (such as bending, torsion, wind, etc.), they shall be determined and added to the pressure load such that

$$F_C = F_{CP} + F_{CO}$$

and

$$F_L = F_{LP} = F_{LO}$$

where

F_C = total circumferential force from all loads, N/mm (lb/in.)
F_{CO} = circumferential force due to other applicable loads, N/mm (lb/in.)
F_L = total longitudinal force from all loads, N/mm (lb/in.)
F_{LO} = longitudinal force due to other applicable loads, N/mm (lb/in.)

(c) Appropriate alternative force calculations for spherical, torispherical, or ellipsoidal pressure components shall be used when applicable.

3.3 Structural Discontinuity Evaluation

(a) For stresses near a nozzle or other structural discontinuity to be insignificant, the minimum distance between the fillet welded patch plate and the existing discontinuity should be

$$L_{\min} = 2(R_m t)^{1/2} \quad (3)$$

where

L_{min} = plate set-back distance (see Fig. 1), mm (in.)
R_m = radius at mid-wall of component, mm (in.)
t = wall thickness of component, mm (in.)

The factor of 2 applies the set-back distance $(R_m t)^{1/2}$ to both the existing nozzle (or other similar structural discontinuity) and the patch plate.

This proximity limit also applies to the distance between adjacent fillet welded patch plates, in those applications where more than one is employed on a given component.

(b) In those applications where the patch plate is to attach to existing nozzle reinforcement pads, the patch plate may be contoured to match the reinforcement pad perimeter and welded thereto with a full penetration joint.

(c) In those applications where the damaged shell is within L_{min} of a nozzle or other structural discontinuity, the patch plate should be designed as a reinforcement pad extending 360 deg around the nozzle/opening, and welded thereto with a full penetration joint. Alternatively, additional detailed analysis shall be performed to evaluate local stresses.

3.4 Allowable Load on Perimeter Fillet Weld

(a) The perimeter weld shall be sized such that the allowable load on the weld exceeds the longitudinal and circumferential loads.

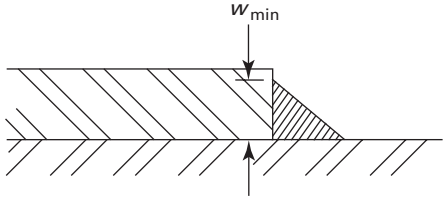

$$F_A = w_{min} E S_a \quad (4)$$

where

E = weld joint efficiency factor (0.55)
F_A = allowable force on fillet welds, N/mm (lb/in.); $F_A > F_C$ and F_L
S_a = allowable base metal stress, MPa (psi)[1]
w_{min} = minimum weld leg dimension, mm (in.)

NOTE: The maximum design fillet weld size shall not exceed the thickness of the thinner material being joined nor 40 mm (1.5 in.).

(b) Alternatively, the perimeter weld edge preparation may be beveled to increase the weld's effective throat thickness. In no case shall the effective throat exceed the thickness of the repair plate or the original component thickness.

(c) In addition, load path eccentricity of the hoop stress in the shell plate and patch plate shall be considered. The perimeter welds bearing circumferential loads shall be sized such that

[1] Compatible weld metal shall be of equal or greater strength.

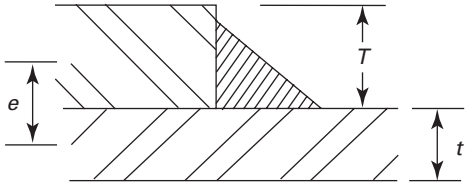

$$S_w = (PD_m/2T) + (3PD_m e/T^2) \quad (5)$$

where

e = load path eccentricity $(T + t)/2$, mm (in.)
S_w = calculated weld stress, MPa (psi); $S_w \le 1.5S_a$
T = wall thickness of patch plate, mm (in.)

3.5 Cold Forming Limits

(a) Carbon and low alloy steel patch plates fabricated by cold forming shall not exceed 5% extreme fiber elongation. The extreme fiber elongation shall be determined as follows:

(1) For double curvature

$$\frac{75T}{R_f}\left(1 - \frac{R_f}{R_o}\right) \le 5\% \quad (6)$$

where

R_f = final centerline radius of patch plate, mm (in.)
R_o = original centerline radius of patch plate (equals infinity for flat plate), mm (in.)
T = thickness of the patch plate, mm (in.)

(2) For single curvature

$$\frac{50T}{R_f}\left(1 - \frac{R_f}{R_o}\right) \le 5\% \quad (7)$$

(b) Patches cold formed beyond these limits may be used provided they receive appropriate post-forming stress relief prior to installation.

4 FABRICATION

(a) Plate edges may be cut to shape and size by mechanical means such as machining, shearing, grinding, or by thermal means such as flame or arc cutting. If thermal means are used, a minimum of 1.5 mm ($\frac{1}{16}$ in.) additional material shall be removed by grinding or machining. If the repair plate is greater than 25 mm (1 in.) thick, and the fillet weld size is less than the plate thickness, the weld prep edges shall be examined by magnetic particle (MT) or liquid penetrant (PT) methods to check for laminations. Laminations shall be cause for rejection unless repaired or found acceptable by fitness-for-service analysis in accordance with API 579-1/ASME FFS-1.

(b) The patch plate may be formed to the required shape by any process that will not unduly impair the mechanical properties of the patch plate material. Where required due to repair plate size or access/interference

considerations, split sections may be used when joined by full penetration welds.

(c) Parts to be fillet welded shall be fit as tightly as practical to the surface to be welded and in no event shall be separated by more than 5 mm ($^3/_{16}$ in.). If the separation at the faying edge of the plate is 1.5 mm ($^1/_{16}$ in.) or greater, the size of the perimeter fillet weld shall be increased by the amount of the separation.

(d) Welding procedures, welders and welding operators shall be qualified in accordance with the current requirements of the applicable code of construction or post-construction code. If not otherwise specified, ASME BPV Code, Section IX may be used for procedure and performance qualification. Guidance for preheat and/or postweld heat treatment, and for in-service welding, as applicable, shall be taken from the applicable code of construction or post-construction code.

(e) Field repair activities should conform to the following sequence:

(1) Paint, scale, rust, liquids and other foreign material shall be removed from the weld zone and an area not less than 40 mm ($1^1/_2$ in.) on either side of the weldment.

(2) In those areas that will be covered by the new patch plate, existing shell seam or girth welds shall be ground flush with the vessel or pipe O.D. and shall be examined by the MT or PT method.

(3) The new patch plate may be placed in position using any suitable method.

(4) Any seams within the patch itself, should be made first. The perimeter fillet weld may then be completed. Clamps or wedges may be used to ensure proper joint alignment and fit-up.

(f) Exposed metal surfaces shall be recoated, if applicable, after completion of all examination and testing.

(g) To preclude gas pressure buildup between the patch plate and the pressure component boundary, provisions for venting during the final closure weld or, if applicable, postweld heat treatment, may be necessary. If the patch plate is designed for through-wall defects but applied to the pressure boundary before being breached, the vent should be sealed after completion of welding and, if applicable, postweld heat treatment.

5 EXAMINATION

(a) Patch plate attachment welds shall be examined in accordance with the applicable code of construction or post-construction code by either the MT or PT methods. If not otherwise specified by the applicable code of construction or post-construction code, NDE shall be performed using procedures written and qualified in accordance with ASME BPVC Section V.

(b) If lifting lugs are used and left in place, their attachment welds shall be examined by MT or PT methods. At all locations where temporary lifting lugs, welded clamps, and/or wedges are removed after patch plate installation, the removal areas shall be examined by MT or PT methods.

(c) Welds joining sections of patch plates made of separate pieces should be surface contoured and volumetrically examined by either radiographic or ultrasonic examination methods to the extent possible. If not practicable, multi-layer PT or MT examinations should be performed.

(d) If postweld heat treatment is required, the examination shall be performed after application of PWHT.

(e) The examination acceptance criteria of the applicable code of construction or post-construction code shall apply.

6 TESTING

(a) Testing shall be performed in accordance with the applicable post-construction code.

(b) The pressure component and installed patch plate(s) should be leak tested in accordance with the applicable post-construction code. Special safety precautions should be taken when pneumatic leak testing is performed.

(c) If permitted by the applicable post-construction code, nondestructive examination may be performed as an alternative to leak testing. Also, an initial service inspection may be performed of all weld joints after the pressure component has returned to normal operating pressure and temperature.

(d) Testing and inspections should be performed prior to reapplication of coating, insulation, or jacketing, as applicable.

7 REFERENCES

API 579-1/ASME FFS-1, Fitness-for-Service, June 5, 2007

Publisher: American Petroleum Institute (API), 1220 L Street NW, Washington, DC 20005-4070

ASME Boiler and Pressure Vessel Code, Section V — Nondestructive Examination

ASME Boiler and Pressure Vessel Code, Section VIII, Division 1 — Rules for Construction of Pressure Vessels

ASME Boiler and Pressure Vessel Code, Section IX — Qualification Standard for Welding and Brazing Procedures, Welders, Brazers, and Welding and Brazing Operators

Publisher: The American Society of Mechanical Engineers (ASME), Three Park Avenue, New York, NY 10016-5990; Order Department: 22 Law Drive, P.O. Box 2300, Fairfield, NJ 07007-2300

(08)

Article 2.13
Threaded or Welded Plug Repairs

1 DESCRIPTION

This repair method describes restoration of a component or system by removing a flaw or defect through the drilling or machining of a hole without replacing the component material. Leak and pressure tightness is achieved by inserting a solid or threaded plug and applying a seal weld. The presence or removal of defects need not be involved. This method may also be used to gain access to a component, inside or outside, for inspection or other purposes.

2 LIMITATIONS

2.1 General

Part 1 of this Standard, Scope, Organization, and Intent, contains additional requirements and limitations. This Article shall be used in conjunction with Part 1.

2.2 Repairs

It is not intended for this Article to be used for routine repair of weld defects or for situations where the condition can be removed by excavating material and leaving the component as is.

2.3 Corrosion

This repair method generally creates a crevice and is therefore not suitable for service environments that may be subject to crevice corrosion.

3 DESIGN

3.1 Design Review

A thorough engineering review of the design shall be undertaken to validate the applicability of this method for restoring integrity to a component or system. As a minimum, the following shall be considered:

(a) need for seal welding vs. threaded plug

(b) unreinforced vs. reinforced configurations

(c) consideration of use of gamma plugs used for radiographic inspection

Figure 1 illustrates a typical plug arrangement.

3.2 Material Properties

Plug material should have similar strength, thermal expansion properties, and alloy content as the original component material. Use of dissimilar materials should be avoided unless evaluated and justified in the engineering review.

3.3 Opening Reinforcement

Reinforcement of the opening shall be designed to comply with the applicable construction or post-construction code.

3.4 Strength Requirements

Thread size, pitch, engagement, etc. (for threaded plugs), and weld size (for unthreaded plugs) shall provide satisfactory load carrying ability to meet the strength requirements of the applicable construction or post-construction code.

3.5 Strength and Corrosion Consequences

Strength and corrosion (crevice, dissimilar materials, etc.) consequences should be evaluated with respect to using solid versus threaded plugs. The effect of service on deteriorated threads versus a pressure retaining weld should be considered.

3.6 Material Removal

The amount of material that is to be removed, the resulting removal area (location, extent, and configuration), and method to restore integrity (smooth plug, threaded plug, reinforcement, etc.) shall be addressed in the design review.

3.7 Finish Dimensions

The finish hole diameter or configuration (after drilling, threading, or tapering, etc.) shall be determined by engineering analysis.

4 FABRICATION

4.1 Flaw Location

The flaw or area of interest shall be located, characterized and sized by ultrasonic or other suitable means.

4.2 Flaw Removal

The flaw or general area should be removed by drilling or machining a circular, through-thickness hole.

4.3 Plug Fabrication

A plug shall be fabricated in accordance with the design specification.

Fig. 1 Typical Plug Arrangement

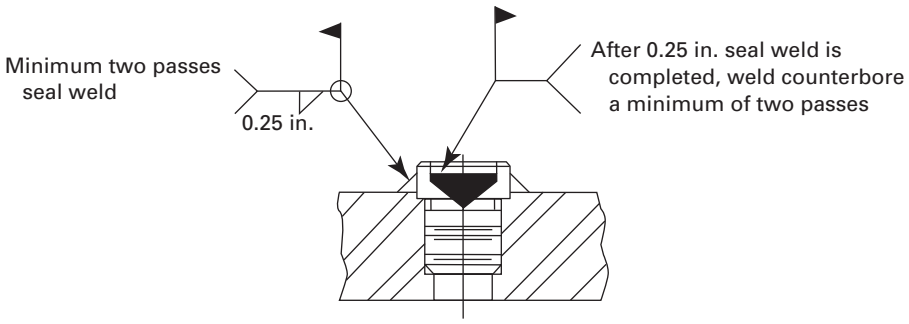

(a) Plug Welded in Position

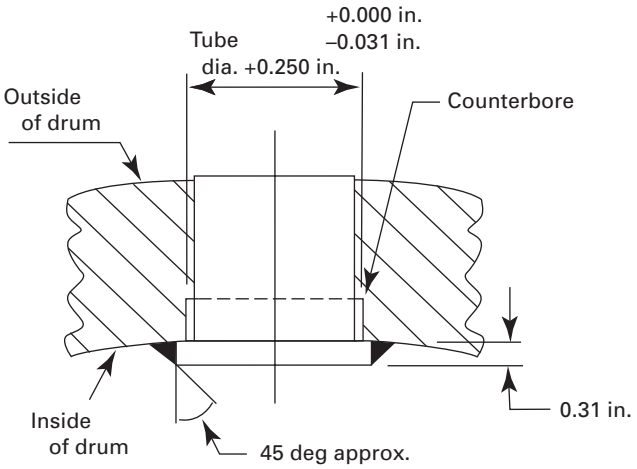

(b) Plug Arrangement for Tube Holes With Inside Counterbore

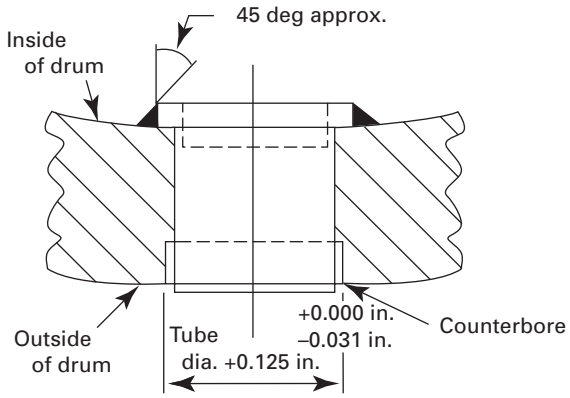

(c) Plug Arrangement for Tube Holes Having No Counterbore or With Outside Counterbore

GENERAL NOTE: Use of counterbores (as shown) typically reduce restraint on the seal welds and minimize cracking.

4.4 Lubricants

Thread lubricant or tape is generally not used with threaded plugs in elevated temperature service.

4.5 Plug Insertion

Insertion (or screw) of the plug shall be verified for fit-up and/or tightness in accordance with the design specification.

4.6 Seal or Fillet Welding

A seal weld or strength fillet weld shall be applied using a qualified welding procedure in accordance with the applicable construction or post-construction code.

5 EXAMINATION

5.1 Flaw Removal Verification

Where a hole and subsequent plug are used to eliminate a flaw or defect, removal shall be verified as required by the applicable construction or post-construction code.

5.2 Surface Examination

A surface examination shall be performed on the completed seal or reinforcing fillet weld in accordance with and if required by the applicable construction or post-construction code.

5.3 Documentation

The inspection, as specified in the governing project documents, shall be documented.

6 TESTING

Leak, tightness, or pressure (hydrostatic or pneumatic) testing shall be performed in accordance with and, if required, by the applicable construction or post-construction code. Preservice inspection for leaks during startup may be performed as an alternative if permitted by the applicable code. See Article 5.1.

7 REFERENCES

ASME Boiler and Pressure Vessel Code, 2007 Edition, Section I, Power Boilers

ASME Boiler and Pressure Vessel Code, 2007 Edition, Section VIII, Division 1, Rules for Construction of Pressure Vessels

ASME Boiler and Pressure Vessel Code, 2007 Edition, Section IX, Welding and Brazing Qualifications

ASME B31.1-2007, Power Piping

ASME B31.3-2006, Process Piping

Publisher: The American Society of Mechanical Engineers (ASME), Three Park Avenue, New York, NY 10016-5990; Order Department: 22 Law Drive, P.O. Box 2300, Fairfield, NJ 07007-2300

PFI ES-16, Access Holes, Bosses and Plugs for Radiographic Inspection of Pipe Welds

Publisher: Pipe Fabrication Institute (PFI), 666 Fifth Avenue, New York, NY 10103

PART 3
MECHANICAL REPAIRS

Article 3.1
Replacement of Pressure Components

1 DESCRIPTION

This Article applies to the replacement of pressure equipment or piping components (such as vessels, valves, instruments, fittings, flange gaskets, etc.) or subassemblies (such as pipe spools, vessel heads, shells, etc.). The replacement may be a replacement in kind (replacement by identical components) or a modification (a change in materials, design, or fabrication).

2 LIMITATIONS

Part 1 of this Standard contains additional requirements and limitations. This Article shall be used in conjunction with Part 1.

3 DESIGN

3.1 Mitigation

If the replacement is due to deterioration, the cause of the deterioration and the need to make changes to mitigate future deterioration should be considered.

3.2 Engineering Evaluation

An engineering evaluation shall be performed if there is any change from the original design. The design engineer shall specify the functional, material, and mechanical requirements for the replacement component or subassembly. Functional requirements include process variables, flow characteristics, etc. Material requirements include choice of materials compatible with the process and with the existing system, choice of material specification, material quality, etc. Mechanical requirements include wall thickness, pressure class, layout, supports, etc.

3.3 Design Code

The mechanical design of the replacement component or subassembly shall comply with the applicable code of construction or post-construction code.

3.4 Modifications

It may be necessary to modify the design of the existing system to accommodate the replacement. For example, replacing a valve with a heavier one may require adding additional supports or large cutouts in vessel shells or replacement of shells may require temporary restraints or supports.

4 FABRICATION

4.1 Safety

Planning and implementation of replacement activities shall thoroughly and clearly account for proper isolation, lockout and tagout, drainage, venting and cleaning of systems or components, in accordance with recognized and accepted engineering practices, regulations, and appropriate safety procedures.

4.2 Welding

The welding (including welding process and procedure, materials, qualification, preweld and postweld heat treatment) or mechanical joining technique of the replacement component or subassembly shall comply with the applicable code of construction or post-construction code.

4.3 Tie-in Joint

The tie-in joint (joint between the replacement part and the existing component) shall be cleaned and made suitable for joining. The existing component at the tie-in should exhibit no evidence of deterioration from the original material thickness, complying with the applicable code of construction or post-construction code, unless justified by an appropriate level of fitness-for-service evaluation.

4.4 Bolted Joint

For the assembly of bolted joints, standards such as ASME PCC-1 should be followed.

5 EXAMINATION

5.1 Criteria

New joints and joints between new and old material shall be examined in accordance with the applicable code of construction or post-construction code, including type, extent and location of examination, and acceptance criteria.

5.2 Mechanical Tie-in

The examination of mechanical tie-in joints (such as flanges, threaded joints, swage or compression fitting, and tube fittings) should be specified by the owner and may consist of the verification of proper joining process and final assembly, or tightness checks by torque wrench or gages where applicable (go/no-go gages, torquing of flanges bolts).

6 TESTING

6.1 Criteria

The new component or subassembly shall be pressure tested and/or examined as required or allowed by the applicable code of construction or post-construction code.

6.2 Alternative

Where it is impractical to perform a hydrostatic pressure test for the welded or mechanical tie-in joints, the organization performing the work may substitute the hydrostatic pressure test with a test method that will verify the leak integrity of the joint. For example, an alternative test method for hydrostatic testing may be a pneumatic test (see para. 6.2.1). When all safety precautions cannot be met or when pressure or leak testing is impractical to perform, nondestructive examination may be used (see para. 6.2.2).

6.2.1 If pneumatic testing is performed, the applied pressure shall not exceed that allowed by the applicable code of construction or post-construction code and all code-specified safety precautions shall be followed.

6.2.2 Where nondestructive examination is used in lieu of pressure or leak testing welded tie-in joints, volumetric examination, such as RT or UT, shall be performed if configuration allows for acceptable and meaningful results. If volumetric examination cannot be performed, other methods, such as PT or MT, may be performed prior to, during, or after welding to the extent needed to verify the weld contains no defects. Where nondestructive examination is used, the acceptance criteria of the applicable code of construction or post-construction code shall apply. For mechanical tie-in joints, the requirements of paras. 4.4 and 5.2 should be followed.

6.2.3 Additional pressure testing requirements, procedures, and recommendations are described in ASME PCC-2, Article 5.1.

6.3 Design Change Monitoring

Following a change in design, the system shall be observed for signs of abnormal vibration, expansion, contraction, or other signs of malfunction during initial operation.

7 REFERENCES

ASME PCC-1, Guidelines for Pressure Boundary Bolted Flange Joint Assembly

ASME PCC-2, Article 5.1, Pressure and Tightness Testing of Piping and Equipment

Publisher: The American Society of Mechanical Engineers (ASME), Three Park Avenue, New York, NY 10016-5990; Order Department: 22 Law Drive, P.O. Box 2300, Fairfield, NJ 07007-2300

Article 3.2
Freeze Plugs

1 DESCRIPTION

1.1 Technique

A freeze plug operation is a technique for isolating a section of piping by cryogenically cooling the outer wall of the pipe and freezing the contained liquid to form a solid plug. Carbon dioxide and liquid nitrogen are the two most commonly used freeze mediums.

1.2 Application

A freeze plug can be performed on water, water solutions, sludge, some hydrocarbons, some acids, some bases, and some other liquids. Freeze plugs have held 170 bar (2,500 psi) for actual field repairs and successfully tested as high as 680 bar (10,000 psi). The success of a freeze plug depends on the freeze point of the liquid, the size of the pipe, the initial temperature, proximity of flow in connecting pipes, and the piping arrangement.

1.3 Risk Assessment

It should be recognized that while performing a freeze plug, a failure could occur resulting in injury to personnel or damage to equipment. Therefore, the end users, in their decision process, shall assess the benefits of the freeze plug technique against the possibility of a plug or pipe failure.

1.4 Basis

This Article is based on experience with freeze plugs in metal pipes.

2 LIMITATIONS

2.1 Additional Requirements

Part 1 of this Standard contains additional requirements and limitations. This Article shall be used in conjunction with Part 1.

2.2 Safety Considerations

2.2.1 Oxygen Deficient Atmosphere. The major hazard of working with liquid nitrogen and carbon dioxide for performing freeze plugs is the possibility of asphyxiation in an oxygen deficient atmosphere. This shall be minimized by following confined space procedures including checking the oxygen content of the atmosphere with an oxygen analyzer. Oxygen monitoring equipment should have a visual indicator and an audible alarm.

2.2.2 Burns. Frost burns are another hazard of cryogenic liquids and solids that should be minimized by the use of proper procedures and protective clothing.

2.2.3 Personnel. Personnel shall be trained and experienced in the freeze method and knowledgeable of the hazards of handling and using cryogenic liquids. Personnel shall also follow proper precautions and procedures related to protective clothing, ventilation in confined spaces, monitoring of temperatures, monitoring of oxygen in the air, emergencies, and first aid.

2.2.4 Confined Space Below Grade. For freeze plugs performed below grade, the freeze jacket should be installed in a separate excavation from the work area. Doing so minimizes the number of individuals exposed to nitrogen gas or liquid. If this is not possible, additional safety precautions shall be taken which may include confined space procedures for all personnel.

2.2.5 Venting Safety. Nitrogen vents should be to the outside or above grade and not into the confined space. Air movers or fans should be used to maintain the fresh air.

2.2.6 Coolant Leaks. Liquid nitrogen leaks from the freeze equipment should be corrected or minimized whenever possible to protect personnel and equipment. Confined space procedures shall be followed when applicable. Work areas should be barricaded and isolated with tarps to protect personnel and equipment when applicable.

2.3 Freeze Point

It is important to know the freeze point temperature of the liquid before performing a freeze plug operation. The freeze point temperature for most processes can be provided by the owner or found in chemical references. If this information is not available, a freeze point temperature test should be performed (see section 6).

2.4 Hydrocarbon Precautions

A freeze plug operation on hydrocarbons shall be evaluated with special precautions. The plug gains strength due to an increase in viscosity as the temperature decreases. The center of the freeze plug is at a higher temperature than the outside of the plug. This means that the viscosity is lower at the center. Therefore, the shear strength of the plug is lower. The temperature reading from the thermocouples shall be sufficiently low

that the internal temperature of the plug is in the range that provides full strength of the freeze plug. The freeze point/range temperature test will aid in evaluating this requirement.

2.5 Light Ends

If the fluid mixture contains light ends that vaporize when the downstream section is vented, the freeze plug will not hold. The feasibility of a freeze plug in this fluid can be determined by performing a freeze point temperature test.

2.6 Impact Loading

The piping system should not be subjected to any significant dynamic or external loads during the freeze operation. For example, do not use hammer wrenches or impact wrenches to remove studs and nuts. The bolts or studs and nuts should be removed one at a time and cleaned or replaced prior to the freeze plug operation to minimize these effects.

(08) ### 2.7 Flow

The pipe to be frozen must be full of liquid at the location of the freeze plug and a "no flow" condition must exist. The most common cause for failure to develop a solid plug and a successful freeze is flow in the pipe. This problem is exacerbated by the fact that it is sometimes difficult to determine whether there is a flow. However, some freezes can be performed on small pipes, up to DN 100 (NPS 4) in size, with a low flow.

(08) ### 2.8 Initial Fluid Temperature

Generally, the liquid being frozen should be at an initial temperature of 50°C (120°F) or below.

(08) ### 2.9 Adjacent Flows

If the freeze plug is located near a tee, flow in the connecting pipe may prevent the freeze, due to eddy currents and the Bernoulli effect.

3 DESIGN

(08) ### 3.1 Pipe Materials

3.1.1 Successful Applications. Freeze plugs have been successfully performed on all commercially available metals. This includes metals that are brittle at normal, intermediate, and cryogenic temperatures.

3.1.2 Ductility. Cryogenic temperatures may be lower than the brittle transition temperature for some materials. Loss of notch toughness is a special concern for carbon steel, low alloy steels, ferritic and martensitic stainless steels, and duplex (austenitic-ferritic) stainless steels. Copper, aluminum, austenitic stainless steels, and high nickel alloys lose some ductility at cryogenic temperatures but generally retain sufficient notch toughness.

3.2 Material Property Changes

As the temperature of the metal decreases, the strength of the material increases, but its fracture toughness decreases. The microstructure and physical properties of a metal are unchanged after the metal has been exposed to cryogenic temperatures and returned to normal temperatures.

3.3 Pressure

The pressure that a freeze plug can hold is directly proportional to the strength of the plug, the strength of the plug is directly proportional to the length of the plug, and the shear strength of the plug increases as the temperature decreases. Ice contracts at a faster rate than steel as the temperature decreases, therefore, the freeze plug exerts no pressure on the inside of the pipe as the freeze plug forms.

3.4 Strength

Freeze plugs formed under higher pressure are stronger. If practical, the freeze plug should be formed at the highest pressure to be encountered during the operation.

3.5 Location

The end user should evaluate the location of permanent and temporary pipe supports to allow for expansion and contraction during the freeze plug operation. The engineering design of drains, vents, pressure relief points, and isolation valves shall also be considered.

3.6 Liquid Nitrogen Freeze Plugs

3.6.1 Background. Liquid nitrogen is the most common method of forming a freeze plug in a pipe. This cryogenic fluid is used for the vast majority of freezes because it is relatively inexpensive, readily available, easily transported, easily stored, and easily transferred to the freeze jacket.

3.6.2 Line Size. The boiling point for liquid nitrogen is −196°C (−320°F). This is far below the temperature required to freeze water and many other liquids. Because of its capacity for high heat transfer rates, liquid nitrogen can be used for freeze plugs in pipe sizes up to DN 1 200 (NPS 48).

3.6.3 Jacket Design. A jacket, as shown in Fig. 1, is used for the freeze. The materials of construction for freeze plug jackets are stainless, aluminum, and fiberglass. The liquid nitrogen inlet valves should be located at both the bottom and the top of the jacket. The valve at the bottom can also be used as a liquid nitrogen drain.

3.6.4 Jacket Length. The length of the jacket used should be not more than three pipe diameters long. Longer jackets should not be used, because a double plug can form within the jacket resulting in a trapped liquid. Should this occur, high pressure can develop

Fig. 1 Nitrogen Freeze Plug Assembly

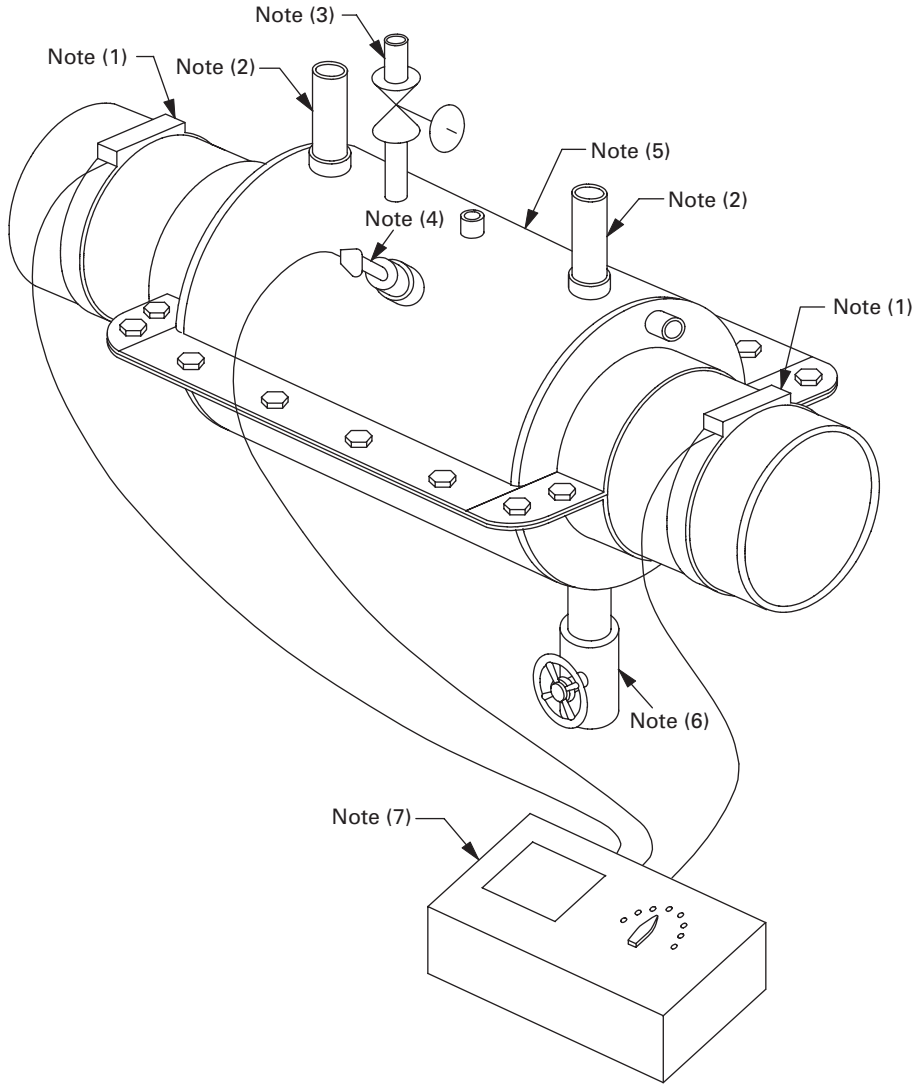

NOTES:
(1) Thermocouples
(2) Nitrogen gas vents
(3) Liquid nitrogen supply
(4) Thermocouple (optional)
(5) Freeze jacket
(6) Liquid nitrogen supply and jacket drain
(7) Temperature monitor

between the plugs and rupture or damage the pipe. For the same reason, two jackets placed end-to-end should not be used.

3.6.5 Jacket Pressure. Freeze plug jackets are designed to operate at atmospheric pressure. The evaporating gas from the liquid nitrogen is vented out the top of the jacket to a safe location in the atmosphere.

3.6.6 Component Materials. The freeze plug jacket, hoses, piping, and valves should be suitable for cryogenic temperatures.

3.6.7 Monitoring. The progress of the freeze plug operation is monitored with a temperature gage connected to the thermocouples located on the pipe at each end of the jacket. An optional probe in the center of the jacket may be used to indicate the jacket/pipe temperature.

3.6.8 Alarms. The electrical signal from the temperature gage can also be used to trigger audible and visual alarms to warn operators and maintenance personnel of either a nitrogen level decrease or a temperature increase above set point, or both.

3.6.9 Critical Applications. In some critical applications additional measures may be taken, including the use of flow monitors, differential pressure monitors, and remote TV cameras to monitor various aspects of the freeze.

3.7 Carbon Dioxide Freeze Plugs

3.7.1 Size Limit. Carbon dioxide is used for freeze plugs in pipe sizes up to DN 100 (NPS 4).

3.7.2 Safety. Carbon dioxide is often used for freeze plugs on water lines in buildings because of the reduced safety risk. However, proper safety precautions shall be followed, which may include confined space procedures.

3.7.3 Jacket Design. The jacket for this technique may be made of cloth wrapped around the pipe and held in place by drawstrings on each end. When liquid carbon dioxide is introduced into the jacket, it forms dry ice. The dry ice sublimes at −78°C (−109°F) and cools the pipe.

3.7.4 Jacket Length. The length of the jacket used should be not more than three pipe diameters long. Longer jackets should not be used, because a double plug can form within the jacket resulting in a trapped liquid. Should this occur, high pressure can develop between the freeze plugs and rupture or damage the pipe. For the same reason, two jackets placed end to end should not be used.

3.7.5 Monitoring. A temperature monitor attached to thermocouples at each end of the jacket is used to monitor and control the freeze plug.

3.7.6 Maintaining Plug. Additional injections of carbon dioxide into the jacket may be required to maintain the freeze plug.

4 FABRICATION

4.1 Procedures

Written procedures, covering the freeze plug operation, personnel requirements, safety, and contingency plans, should be prepared and reviewed by appropriate personnel prior to the start of the job.

4.2 Compatibility

The freeze point of the liquid in the pipe shall be in an acceptable range consistent with the freeze medium and equipment being used.

4.3 Coolant Supply

An adequate supply of nitrogen or carbon dioxide should be available for performing the job. Large freezes or long hold times may require either an on-site storage tank or additional deliveries of nitrogen or carbon dioxide, or both.

4.4 Insulation and Coatings

Insulation and mastic coatings shall be removed from the pipe in the area to be frozen to allow installation of the jacket and thermocouples. It is not necessary to remove thin coatings such as paint.

4.5 Environment

Environmental conditions may affect the freeze plug operation. Therefore, the freeze plug equipment should be shielded from the wind, rain, and heat sources such as the sun, hot pipes, and hot equipment.

4.6 Closed Systems

Special precautions shall be taken to prevent damage to the piping system when the freeze plug operation is located near a closed end such as a weld cap, blind flange, or closed valve. Once the freeze plug is formed, the differential expansion of the ice forming from the liquid can cause an increase in pressure in the closed volume and damage the pipe.

4.7 Related Equipment

Evaluation of equipment, such as pumps that can cause a pressure surge, should be made in the planning stage of the freeze plug operation. Whenever possible, this equipment should be isolated for the duration of the job.

4.8 Installation

The freeze plug equipment shall be installed on the pipe per the procedure.

4.9 Monitoring Time Frame

The freeze plug operation shall be monitored continuously from the time liquid nitrogen or liquid carbon dioxide is introduced into the jacket to the completion of all work.

4.10 Plug Verification

Three indicators shall be verified to ensure adequate strength of the freeze plug before opening the system and performing work.

(a) The primary indicator is the temperature reading at each end of the jacket, which shall be at or below the preestablished set point temperature.

(b) A full circle frost ring should develop on each end of the jacket.

(c) A test of the freeze plug shall be conducted at or above the highest pressure that will be encountered.

The test of the freeze plug can be performed by cracking a flange, opening a valve, or hot-tapping a hole in the pipe to release the pressure on the downstream side, thus utilizing the pressure on the upstream side of the plug for the test. In order to ensure the integrity of the freeze plug before the pipe is fully opened and work begins, the test shall be maintained for the time period prescribed in the procedures. Hydrocarbon products should be pressure tested for a longer period of time to ensure that a freeze plug of adequate strength has formed.

4.11 Leakage

If process leakage is observed after draining the downstream portion of the pipe, the source of leakage shall be identified. If the leakage is from the freeze plug, continue the freeze. If from a different source, the leak should be evaluated and corrected or if deemed tolerable, the work can be performed.

4.12 Welding

When welding near the freeze plug, special procedures and precautions shall be followed to prevent melting and failure of the plug.

4.13 Duration

The freeze plug operation shall continue until the piping system is secure and the equipment owner or his representative authorizes stopping.

4.14 Testing

Before putting the system back in service, the freeze plug may be used for pressure testing new components.

4.15 Return to Service

When the work is completed, the downstream pipe should be backfilled, the pressure equalized, and the air in the pipe removed at a high point vent.

4.16 Thawing

The recommended method for removing the freeze plug is to allow it to thaw naturally. This will minimize the risk of it moving downstream and damaging the piping system. It is generally not recommended to apply heat to the pipe to speed thawing of the plug.

5 EXAMINATION

5.1 Visual Inspection

The pipe in the freeze plug location should be visually inspected for defects, gouges, external corrosion, and other factors that could affect the integrity of the pipe.

5.2 Nondestructive Examination

The pipe should be nondestructively inspected to determine the wall thickness and condition. Welds in or near the freeze plug area should be inspected using radiographic or ultrasonic techniques.

5.3 Evaluation

Based on this data, an evaluation and determination should be made as to the suitability of a freeze in that location. However, the condition of the pipe is not an absolute indicator that the pipe will or will not fail during a freeze plug operation.

6 TESTING

6.1 Unknown Fluid Properties

A freeze point temperature test should be performed on fluids of questionable or unknown freeze point or freeze range to verify the suitability of the product for a freeze plug operation. This is particularly important for hydrocarbon mixtures with varying viscosity or light ends that can vaporize when the downstream side of the plug is depressured. Volatile components in the liquid may prevent a successful freeze plug, and their effect must be evaluated.

6.2 Freeze Point Test

The freeze point temperature test can be performed with a small freeze jacket and associated equipment. The jacket can be mounted on a short flanged spool filled with a sample of the fluid and pressurized to $1\frac{1}{2}$ times the operating pressure. After a freeze plug is formed, the flange may be removed for inspecting and evaluating the strength of the plug.

6.3 Temperature Monitor Calibration

The temperature monitor should be periodically calibrated. Additionally, it should be routinely checked by comparison to ambient, ice water, or other reference temperature before every job.

6.4 Oxygen Monitor Calibration

The oxygen monitor should be periodically calibrated. It should be checked by comparison to atmospheric oxygen content before every job.

Article 3.3
Damaged Threads in Tapped Holes

1 DESCRIPTION

1.1 Introduction

The design requirements of equipment such as vessels, machinery, valves, instruments, etc., where close coupling is required because of operational, economic, or space considerations, often dictate the use of tapped holes; usually with a stud, but sometimes with a cap screw. When a stud is used, the stud is engaged within a drilled and tapped hole at one end and secured with a nut at the other end. The threads in the tapped hole often have a tighter fit with the stud than do the threads in the nut. The tighter fit usually is specified, and the stud is usually bottomed in the tapped hole, to facilitate removing the nut from the stud without removing the stud from the tapped hole. Threads in tapped holes often are damaged when studs are removed after a period of service.

1.2 Methods of Repair — Alternatives

This Article is intended to cover the repair of damaged threads in tapped blind holes in studded connections by one of the following methods:

(a) drilling and tapping the existing stud holes to a larger size, and replacing the existing size fastener with one sized accordingly

(b) drilling and tapping the existing stud holes to a larger size, for the purpose of installing helical-coil threaded inserts

(c) filling the existing stud holes with weld metal, redrilling, and retapping the holes

1.3 Repair Methods Not Covered

Other methods which may be considered for repair of damaged threads, but which are not covered in this Article, include the following:

(a) retapping the existing stud holes with the same size tap (also referred to as "chasing" the threads)

(b) replacement of the component containing the tapped holes

NOTE: Most of the guidelines in this Article are intended for repair of damaged threads in tapped blind holes, as would be found in studded connections. While this Article does not specifically exclude applications such as holes that extend completely through the pressure component, the user is cautioned that many of the requirements herein may not be applicable or sufficient to cover those cases.

2 LIMITATIONS

2.1 Additional Requirements

Part 1 of this Standard contains additional requirements and limitations. This Article shall be used in conjunction with Part 1.

2.2 Retapping Existing Holes

Unless visual examination of the threads in the stud hole indicates substantial damage to the threads, it is sometimes advantageous to attempt to retap the holes using the same size tap, a process known as "chasing" the threads. Sometimes the only problem is that corrosion products and/or residue from the process plugged the threads.

2.3 Design Adequacy of Enlarging Stud Holes

Enlargement of existing stud holes shall not be done until an engineering analysis confirms the design adequacy of the proposed assembly (see section 3).

2.4 Repair of Cracks

If an examination of the stud holes reveals cracks at the face of the hole opening (see section 5), those cracks shall be repaired prior to enlargement of existing stud holes, if the enlarged hole size is not sufficient to remove the cracks.

2.5 Welding and Material Considerations

If repairs involve welding, with or without postweld heat treatment, the potential exists for warpage of the assembly and possible leakage. For some materials (such as low alloy steels), subsequent postweld heat treatment operations may adversely affect the material toughness. Also, consideration shall be given to the potential for cracking of materials that may have experienced temper embrittlement. In these situations, either a welding or materials specialist, or both, should be consulted prior to commencing repairs.

2.6 Helical Coil Thread Inserts

Helical coil thread inserts are generally available up to $1\frac{1}{2}$ Unified Coarse Series (UNC). The application of helical-coil threaded inserts shall be per the manufacturer's recommendations, particularly with respect to service conditions (internal, external), materials, and loadings. ASME B18.29.1 provides additional information.

3 DESIGN

3.1 Applicable Codes

Upon completion of the repair, the design of the bolted assembly shall be in accordance with the original code of construction or applicable post-construction code.

3.2 Thread Modification

A standard taper tap will produce incomplete tapped threads near the bottom of the tapped hole; even the use of a bottoming tap will not ensure a complete final thread. As a consequence, bottoming a fully threaded stud into a tapped hole that has incomplete threads near the bottom damages the full threads on the end of the stud. This almost ensures that the full threads in the tapped hole will be damaged as the stud with damaged threads is backed out. A practice that has been used successfully to prevent this from occurring is to remove some of the threads from the studs and to increase the depth of the tapped holes accordingly. A sketch with suggested dimensions is provided in Appendix I.

3.3 Enlargement of Existing Holes

The design considerations specified in paras. 3.3.1 through 3.3.4 are applicable to repair of damaged threads by enlarging the tapped hole diameter.

3.3.1 Check of Thread Engagement. Before enlarging the tapped hole diameter, the length of thread engagement shall be rechecked to ensure compliance with the requirements of the original code of construction [e.g., UG-43(g) of ASME BPVC Section VIII, Division 1; AD-740 of ASME BPVC Section VIII, Division 2; or KD-615(b) of ASME BPVC Section VIII, Division 3] or applicable post-construction code.

NOTE: If the parts under consideration are not governed by the rules of the ASME Code, another applicable code of construction, or applicable post-construction code, the design may refer to ASME B1.1 (Appendix B — Thread Strength Design Formulas).

3.3.2 Check of Flange Stresses. If the fastener diameter is increased, the flange stresses (including the untapped mating flange/cover) shall be rechecked to see if they remain within acceptable levels, given the potential for increased loads generated by the larger fastener diameter. This should include consideration of increased bolt preload due to the larger fasteners on flange stresses due to bolt up.

3.3.3 Tapered Studs. In some applications, it may be possible to replace the existing studs with a custom "tapered" stud (see Fig. 1 for an example), where one end of the stud retains its original diameter while the other end is enlarged. This maintains the design bolt loads consistent with the original design, avoids the need to drill larger holes in the mating flange/cover, and permits the possible reuse of the nuts.

3.4 Hole Enlargement Implications on Design

When the existing tapped hole is drilled to a larger diameter, material is removed from the component containing the hole. The design shall consider the implications associated with this repair method to ensure that the remaining material provides sufficient strength to satisfy the intended design conditions. Appendix II offers an example of a check made to a studded outlet connection in a pressure vessel.

3.5 Design of Helical Coil Thread Inserts

Helical-coil threaded inserts shall satisfy the design requirements of the original code of construction, or applicable post-construction code, for the specified loading to be applied to the threaded connection. In general, the design is based on balancing the tensile strength of the stud material against the shear strength of the component base material. For materials not listed in the original code of construction, or applicable post-construction code, primary stresses should not exceed the lesser of two-thirds of the minimum specified yield strength or $\frac{1}{3.5}$ of the minimum specified tensile strength of the applicable material.

4 FABRICATION

4.1 Hole Depth of Penetration

Drilled holes to be tapped shall not exceed the maximum depth of penetration through the thickness of the pressure component, as defined by the original code of construction [e.g., UG-43(d) of ASME BPVC Section VIII, Division 1 or AD-630 of ASME BPVC Section VIII, Division 2], or applicable post-construction code.

4.2 Hole Preparation Before Welding

If the damaged threads are repaired by filling the existing stud holes with weld metal, the holes shall be free of debris and the existing threads removed (usually done by drilling out) to ensure that the new weld deposit does not include this material.

4.3 Welding Procedures and Qualifications

Welding procedures, welders, or welding operators, where used, shall be qualified in accordance with the original code of construction or applicable post-construction code.

4.4 Welding and Material Considerations

Any special welding requirements, including preheat or postweld heat treatment, shall be in accordance with the original code of construction, or applicable post-construction code. Because of the potential for warpage of the component, a welding/materials specialist should be consulted regarding procedures/processes, preheat, and postweld heat treatment.

Fig. 1 Example of Tapered Stud

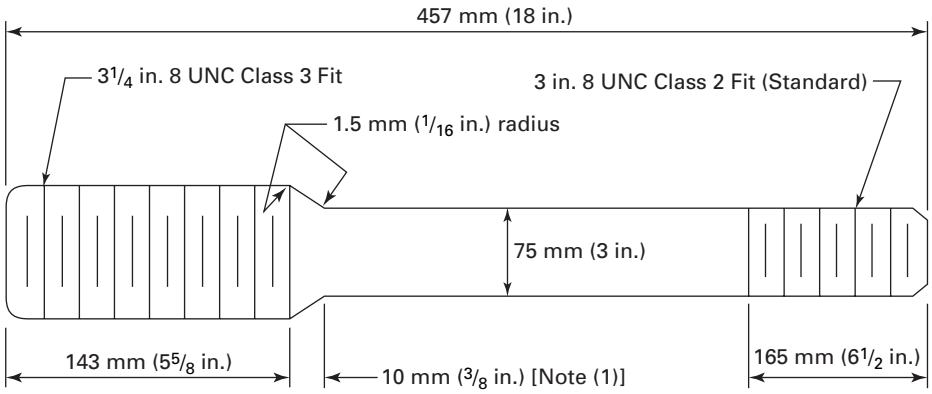

NOTE:
(1) For other sizes, as needed to attain a 3:1 taper.

4.5 Flange Refinishing

If the gasket contact surface has been warped as a result of weld repairs or heat treatment, it may require refinishing. See Article 3.5.

4.6 Installation of Helical Coil Thread Inserts

When helical-coil threaded inserts are used, they shall be installed in accordance with the manufacturer's instructions.

4.7 Thread Galling and Lubrication

Special attention should be given to prevent thread galling after assembly. In addition, lubricant should be applied to the bolt thread surface in accordance with ASME PCC-1, section 7.

5 EXAMINATION

5.1 Visual Examination

Drilled holes shall be visually examined for workmanship, cleanliness, and evidence of cracking.

5.2 Need for Additional NDE

Where material deterioration or damage is suspected, additional nondestructive examination shall be considered.

5.3 Examination Procedures

Examination procedures shall be in accordance with the original code of construction or applicable post-construction code.

6 TESTING

Testing requirements associated with modification of the flange assembly shall be in accordance with the applicable post-construction code.

7 REFERENCES (08)

ASME B1.1-2003, Unified Inch Screw Threads (UN and UNR Thread Form)

ASME B18.29.1-1993, Helical Coil Screw Thread Inserts — Free Running and Screw Locking (Inch Series), including Errata issued August 1995

ASME Boiler and Pressure Vessel Code, 2007 Edition: Section VIII, Division 1 — Rules for Construction of Pressure Vessels; Section VIII, Division 2 — Alternative Rules; Section VIII, Division 3 — Alternative Rules for Construction of High Pressure Vessels

ASME PCC-1–2000, Guidelines for Pressure Boundary Bolted Flange Joint Assembly

Publisher: The American Society of Mechanical Engineers (ASME), Three Park Avenue, New York, NY 10016-5990; Order Department: 22 Law Drive, P.O. Box 2300, Fairfield, NJ 07007-2300

Article 3.3, Mandatory Appendix I
Recommended Detail for Stud Threads Modification to Prevent Damage to Threads in Tapped Holes

Fig. I-1 Inch Thread Series/U.S. Customary Units

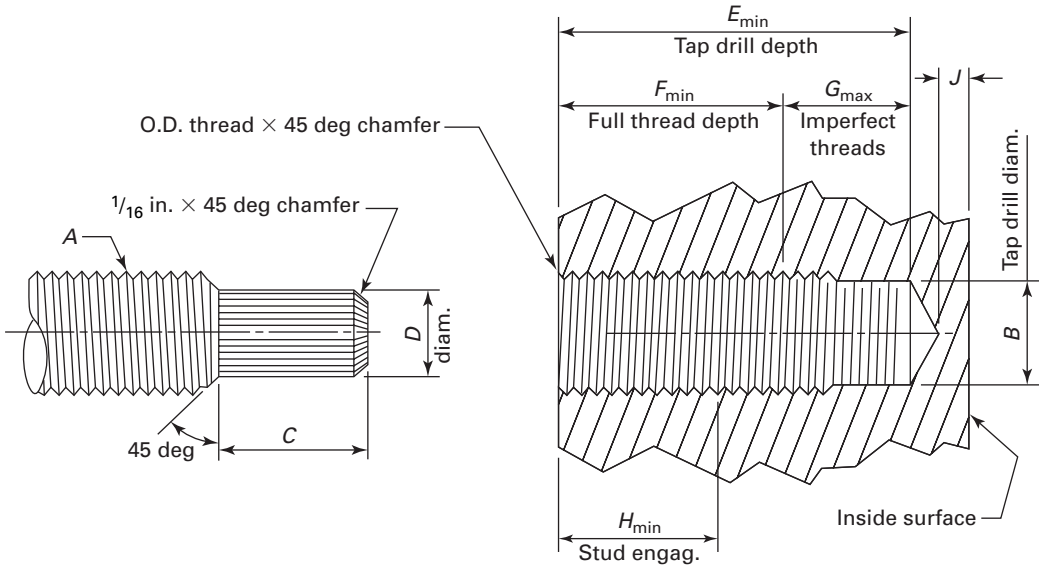

Dimensions								
A	B	C	D	E	F	G	H	J
5/8 - 11 UNC-2	17/32	11/16	7/16	1 9/16	1	9/16	13/16	Per para. UG-43(d)
3/4 - 10 UNC-2	21/32	3/4	1/2	1 3/4	1 1/8	5/8	15/16	
7/8 - 9 UNC-2	49/64	13/16	5/8	1 7/8	1 3/16	11/16	1	
1 - 8 UNC-2	7/8	7/8	11/16	2 3/16	1 7/16	3/4	1 3/16	
1 1/8 - 8 UN-2	1	7/8	13/16	2 5/16	1 9/16	3/4	1 5/16	
1 1/4 - 8 UN-2	1 1/8	7/8	15/16	2 7/16	1 11/16	3/4	1 7/16	
1 1/2 - 8 UN-2	1 3/8	7/8	1 3/16	2 11/16	1 15/16	3/4	1 11/16	
1 3/4 - 8 UN-2	1 5/8	7/8	1 7/16	2 15/16	2 3/16	3/4	1 15/16	
2 - 8 UN-2	1 7/8	7/8	1 11/16	3 3/16	2 7/16	3/4	2 3/16	

GENERAL NOTES:

(a) The tabulated dimensions satisfy ASME Code Section VIII, Division 1, para. UG-43(g) requirements for stud materials having an allowable stress of 25,000 psi and tapped materials having an allowable stress of 20,000 psi at the design temperature for the joint. For materials having other allowable stresses, these dimensions must be adjusted accordingly.

(b) Overall stud length may be determined by adding the Thickness of the Mating Flange + Nut Height + Gasket Thickness + E + Thickness of the Spacer (if any) + 1/4 in.

(c) All dimensions in inches.

Fig. I-2 Inch Thread Series/SI Units

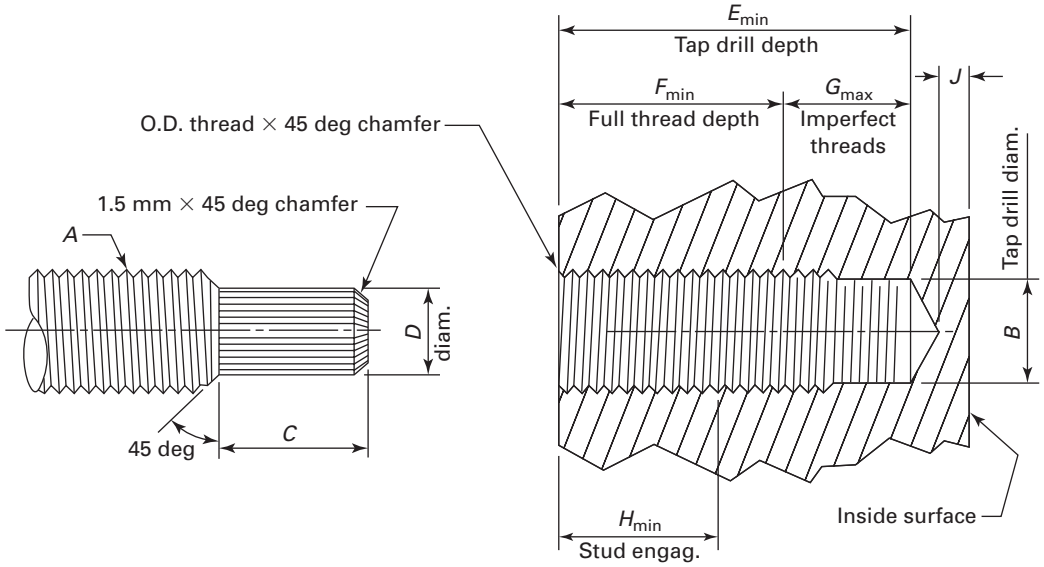

Dimensions								
A	B	C	D	E	F	G	H	J
5/8 - 11 UNC-2	13	17	11	40	25	14	21	Per para. UG-43(d)
3/4 - 10 UNC-2	17	19	13	44	29	16	24	
7/8 - 9 UNC-2	19	21	16	48	30	17	25	
1 - 8 UNC-2	22	22	17	56	37	19	30	
1 1/8 - 8 UN-2	25	22	21	59	40	19	33	
1 1/4 - 8 UN-2	29	22	24	62	43	19	37	
1 1/2 - 8 UN-2	35	22	30	68	49	19	43	
1 3/4 - 8 UN-2	41	22	37	75	56	19	49	
2 - 8 UN-2	48	22	43	81	62	19	56	

GENERAL NOTES:

(a) The tabulated dimensions satisfy ASME Code Section VIII, Division 1, para. UG-43(g) requirements for stud materials having an allowable stress of 173 MPa and tapped materials having an allowable stress of 138 MPa at the design temperature for the joint. For materials having other allowable stresses, these dimensions must be adjusted accordingly.

(b) Overall stud length may be determined by adding the Thickness of the Mating Flange + Nut Height + Gasket Thickness + E + Thickness of the Spacer (if any) + 6 mm.

(c) Dimensions in columns B through H are in millimeters.

Fig. I-3 Metric Thread Series/SI Units

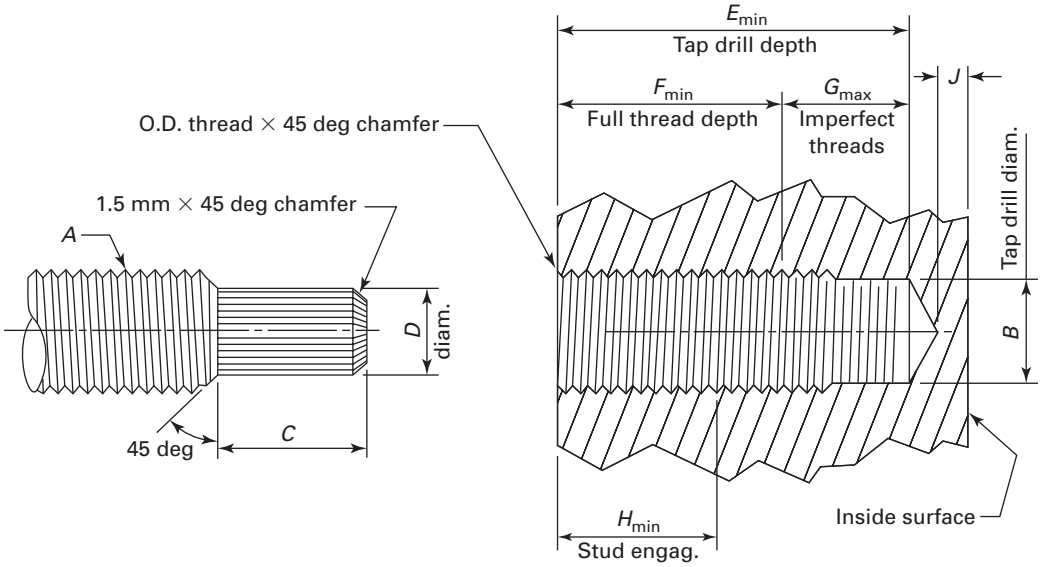

Dimensions								
A	B	C	D	E	F	G	H	J
M14-2	12	17	10	36	22	14	19	Per para. UG-43(d)
M16-2	14	17	12	39	25	14	22	
M20-2.5	17	19	13	45	29	16	26	
M24-3	21	22	16	55	36	19	29	
M27-3	24	22	19	58	39	19	32	
M30-3	28	22	23	61	42	19	35	
M33-3	31	22	26	63	44	19	38	
M36-3	33	22	28	66	47	19	41	
M39-3	36	22	31	69	50	19	44	
M42-3	39	22	34	72	53	19	47	
M45-3	42	22	37	75	56	19	50	
M48-3	45	22	40	78	59	19	53	

GENERAL NOTES:

(a) The tabulated dimensions satisfy ASME Code Section VIII, Division 1, para. UG-43(g) requirements for stud materials having an allowable stress of 173 MPa and tapped materials having an allowable stress of 138 MPa at the design temperature for the joint. For materials having other allowable stresses, these dimensions must be adjusted accordingly.

(b) Overall stud length may be determined by adding the Thickness of the Mating Flange + Nut Height + Gasket Thickness + E + Thickness of the Spacer (if any) + 6 mm.

(c) All dimensions in millmeters.

Article 3.3, Mandatory Appendix II
An Illustrative Example Showing an Engineering Analysis Associated With Enlarging a Tapped Hole

II-1 EXAMPLE 1

The following is an illustrative example showing an engineering analysis associated with enlarging a tapped hole:

Consider the studding outlet fitting as shown below

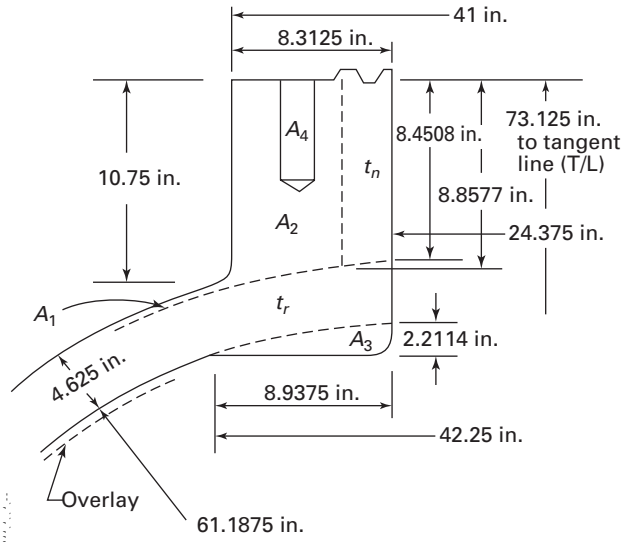

VESSEL DATA:
(1) Design pressure — 2160 psig at 840°F
(2) Shell — SA-387 Gr. D w/347 SS weld overlay
(3) Studs — 3 in. 8 UN stud bolt, SA-193-B16 material
(4) Forging — SA-336-F22 w/347 SS weld overlay
(5) Allowable stress of forging @ 840°F, S_F = 14,520 psi
(6) Allowable stress of stud bolt @ 840°F, S_B = 21,200 psi

NOTE: While removing the existing 3 in. diameter studs, some of the stud holes were found to have stripped threads. The calculations that follow are intended to assess the adequacy of the design if the stud holes are enlarged to 3¼ in.

(08) II-1.1 Nomenclature

A = total cross-sectional area required in the plane under consideration, in.^{2}
A_1 = area of excess thickness in the vessel shell available for reinforcement, in.^{2} [see UG-37(a) of ASME BPVC Section VIII, Div. 1]
A_2 = area of excess thickness in the nozzle wall available for reinforcement, in.^{2} [see UG-37(a) of ASME BPVC Section VIII, Div. 1]
A_3 = area available for reinforcement when the nozzle extends inside the vessel wall, in.^{2} [see UG-37(a) of ASME BPVC Section VIII, Div. 1]
A_4 = cross-sectional area of the stud hole, in.
$A_{4\ (3\ \text{in.})}$ = cross-sectional area of a stud hole associated with a 3 in. diameter stud, in.
$A_{4\ (3¼\ \text{in.})}$ = cross-sectional area of a stud hole associated with a 3¼ in. diameter stud, in.
A_s = tensile stress area, in.^{2}
AS_s = minimum thread shear area for external threads, in.
b_3 = base length of that portion of nozzle defining the area A_3 projecting inward from inner surface of vessel, in.
d = finished diameter of the opening, in. [see UG-37(a) of ASME BPVC Section VIII, Div. 1]
D_1 max. = maximum minor diameter of internal thread, in.
D_2 = basic pitch diameter, in.
d_2 min. = minimum pitch diameter of external thread for class of thread specified, in.
d_s = nominal diameter of the stud, in.
E = edge distance from centerline of stud to outer edge of the forging, in.
E_n = joint efficiency of the nozzle neck
E_s = joint efficiency of the shell [see E_1 in UG-37(a) of ASME BPVC Section VIII, Div. 1]
F = correction factor that compensates for the variation in internal pressure stresses on different planes with respect to the axis of a pressure vessel [see UG-37(a) of ASME BPVC Section VIII, Div. 1]
H = height of fundamental triangle, 0.866025p, in.
h_3 = height of that portion of nozzle defining the area A_3 projecting inward from inner surface of vessel, in.
h_i = height of inside of that portion of nozzle defining area A_2 projecting outward from outer surface of vessel, in.

h_o = height of outside of that portion of nozzle defining area A_2 projecting outward from outer surface of vessel, in.
L = inside spherical radius for hemispherical head, in.
L_c = length of engagement, in.
p = thread pitch (1/number of threads per inch), in.
P = design pressure, psi
q = degree of plane with the longitudinal axis of the vessel, (see Fig. UG-37 of ASME BPVC Section VIII, Div. 1)
R_n = Inside radius of the nozzle under consideration, in.
S_B = allowable stress of stud bolt, psi
S_F = allowable stress of forging, psi
S_s = allowable stress of shell, psi
t = specified vessel wall thickness, in. [see UG-37(a) of ASME BPVC Section VIII, Div. 1]
t_r = required thickness of the shell, in. [see UG-37(a) of ASME BPVC Section VIII, Div. 1]
t_{rn} = required thickness of a seamless nozzle wall, in. [see UG-37(a) of ASME BPVC Section VIII, Div. 1]
ΣA_n = sum of areas contributing to reinforcement, $A_1 + A_2 + A_3$, in.

(08) II-1.2 Evaluate Length of Engagement, L_c

Per UG-43(g) of ASME BPVC Section VIII, Division 1, the minimum thread engagement length is the larger of d_s (the nominal diameter of the stud) or

$$0.75d_s \times \frac{\text{Maximum allowable stress value of stud material at design temperature}}{\text{Maximum allowable stress value of tapped material at design temperature}}$$

$$= 0.75\ (3.25) \times \frac{21{,}200}{14{,}500} = 3.564 \text{ in.}$$

Since this value is larger than d_s (3.25 in.), the required length of engagement, L_c, is 3.564 in.

Since actual thread depth (4½ in.) exceeds calculated L_c, length of engagement is adequate.

NOTE: The required length of engagement will be checked with the criteria in ASME B1.1-2003, in part for illustrative purposes, but also because some of the values for diameters will be used further in the analysis.

(08) II-1.2.1 Length of Engagement, L_c, Using Criteria From Appendix B of ASME B1.1-2003

$$L_c = \frac{2\ (AS_s)}{3.1416 D_1 \text{ max.} \left[\frac{1}{2} + 0.57735\ (1/p)\ (d_2 \text{ min.} - D_1 \text{ max.})\right]}$$

$$A_s = 3.1416 \left(\frac{D_2}{2} - \frac{3H}{16}\right)^2$$

where

A_s = tensile stress area of thread
AS_s = minimum thread shear area for external threads
D_1 max. = maximum minor diameter of internal thread, in.
D_2 = basic pitch diameter
d_2 min. = minimum pitch diameter of external thread for class of thread specified, in.
H = $0.866025404p = 0.866025404/8 = 0.1083$
L_c = minimum length of engagement, in. (NOTE: ASME B1.1 defines *length of engagement* as *LE*)
$1/p$ = number of threads per inch

NOTE: The factor of 2 in the numerator of the above formula for L_c means that it is assumed that the area in shear of the stud is twice the tensile stress area to develop the full strength of the stud. This value is slightly larger than required and provides a small factor of safety against stripping.

For a 3¼ in. 8 UN Stud Bolt

	Class 2 Fit	Class 3 Fit	Comments
D_1 max.	3.140	3.1297	From Table 3A of ASME B1.1
d_2 min.	3.1575	3.1623	From Table 3A of ASME B1.1
D_2	3.1688	3.1688	From Table 13 of ASME B1.1

For a Class 2 fit

$$A_s = 3.1416 \left[\frac{3.1688}{2} - \frac{3\ (0.1083)}{16}\right]^2 = 8.0898 \text{ in.}^2$$

Substitute the value of A_s (tensile stress area) for the value of AS_s (minimum thread shear area of internal threads) and solve for the thread engagement, L_c

$$L_c = \frac{2 \times 8.0898}{3.1416 \times 3.140 \left[\frac{1}{2} + 0.57735 \times 8\ (3.1575 - 3.140)\right]}$$

$$= 2.823 \text{ in.}$$

For a Class 3 fit

$$A_s = 3.1416 \left[\frac{3.1688}{2} - \frac{3\ (0.1083)}{16}\right]^2 = 8.0898 \text{ in.}^2$$

$$L_c = \frac{2 \times 8.0898}{3.1416 \times 3.1297 \left[\frac{1}{2} + 0.57735 \times 8\ (3.1623 - 3.1297)\right]}$$

$$= 2.529 \text{ in.}$$

Since actual thread depth (4½ in.) exceeds calculated L_c, length of engagement is adequate for either a Class 2 or 3 fit.

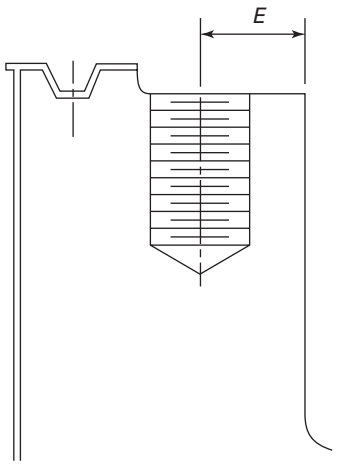

Check distance required from the edge of the nozzle forging to the centerline of the stud bolt

$$\text{Force generated by stud bolt} = S_B A_s$$

$$\text{Maximum Allowed Force on Forging} = \frac{\pi}{4}\left[(2E)^2 - d_s^2\right]S_F$$

Assuming the new stud diameter of 3¼ in., set the force the maximum allowed force on the forging and solve for the minimum edge distance E

$$S_B A_s = \frac{\pi}{4}\left[(2E)^2 - d_s^2\right]S_F$$

$$21{,}200 \times 8.0898 = \frac{\pi}{4}\left[(2E)^2 - 3.25^2\right]14{,}520$$

$$E = 2.523 \text{ in.}$$

The actual edge distance of 3 in. exceeds the required minimum edge distance, E.

NOTE: Enlargement of the existing 3 in. 8 UN Stud Bolt to a 3¼ in. 8 UN Stud Bolt appears to be okay; however, nozzle opening reinforcement should be verified.

II-1.3 Nozzle Reinforcement Calculation. Minimum thickness of hemispherical head, t_r:

$$t_r = \frac{PL}{2S_sE_s - 0.2P} = \frac{2160 \times 61.1875}{(2 \times 14{,}520 \times 1.0) - (0.2 \times 2160)}$$

$$= 4.62 \text{ in.}$$

Minimum thickness of nozzle neck, t_m

$$t_{rn} = \frac{PR_n}{S_FE_n - 0.6P} = \frac{2160 \times 12.1875}{(14{,}520 \times 1.0) - (0.6 \times 2160)}$$

$$= 1.99 \text{ in.}$$

Required reinforcement area, A

$$A = 0.5dt_rF = 0.5 \times 24.375 \times 4.62 \times 1.0 = 56.305 \text{ in.}^2$$

Available reinforcement

$$A_1 = 0.5d\,(t - t_{rn}) = 0.5 \times 24.375\,(4.625 - 4.62) = 0.061 \text{ in.}^2$$

$$A_2 = \frac{1}{2}(h_o + h_i)\,(t_n - t_{rn})$$

$$= \frac{1}{2} \times (10.75 + 8.8577) \times (8.3125 - 1.99) = 61.985 \text{ in.}^2$$

$$A_3 = \frac{1}{2}b_3\,h_3 = \frac{1}{2} \times 2.2114 \times 8.9375 = 9.8822 \text{ in.}^2$$

$$\Sigma A_n = A_1 + A_2 + A_3 = 0.061 + 61.985 + 9.8822 = 71.928 \text{ in.}^2$$

Subtract stud hole area from EA_n:

(a) For a 3 in. Stud Bolt:

$$A_4 = (d_s \times \text{Stud Depth}) + \left[\frac{1}{2} \times d_s \times (d_s/2 \div \tan 59)\right]$$

$$= (3 \times 4.5) + \left(\frac{1}{2} \times 3 \times 0.901\right) = 14.852 \text{ in.}^2$$

Therefore, available reinforcement

$$\Sigma A_n - A_4 = 71.928 - 14.852 = 57.076 \text{ in.}^2 > A$$

(b) For a 3¼ in. Stud Bolt:

$$A_4 = (d_s \times \text{Stud Depth}) + \left[\frac{1}{2} \times d_s \times (d_s/2 \div \tan 59)\right]$$

$$= (3.25 \times 4.5) + \left(\frac{1}{2} \times 3.25 \times 0.976\right) = 16.211 \text{ in.}^2$$

Therefore, available reinforcement

$$\Sigma A_n - A_4 = 71.928 - 16.211 = 55.72 \text{ in.}^2 < A$$

NOTE: If we consider on a given plane through the nozzle centerline that only one stud hole is enlarged to 3¼ in. while maintaining the opposite hole diameter at 3 in. we may be able to calculate the reinforcement as follows:

$$\text{Required Reinforcement, } A = 2 \times 56.305 = 112.61 \text{ in.}^2$$

$$\Sigma A = 2 \times 71.928 - A_{4\,(3¼\text{ in.})} = A_{4\,(3\text{ in.})}$$

$$= 2 \times 71.928 - 14.8 - 16.03 = 113.03 > 112.61$$

II-2 EXAMPLE 2

Example 1 in section I-1 is for a centrally located opening in a spherical shell. Example 2 has been modified for an opening in a cylindrical shell, to illustrate the difference associated with studs that straddle the natural centerlines such that the required area for the nearest pair of tapped holes would be in a plane of reduced required reinforcement area. Only the reinforcement calculation is repeated here, the preceding calculations involving Length of Engagement and Edge Distance remain valid.

NOTE: Enlargement of the existing 3 in. 8 UN Stud Bolt to a $3\frac{1}{4}$ in. 8 UN Stud Bolt appears to be okay; however, nozzle opening reinforcement should be verified.

II-2.1 Nozzle Reinforcement Calculation

II-2.1.1 Minimum Thickness of Cylindrical Shell, t_r.

For the purposes of this illustrative example, the minimum thickness of the cylindrical shell, t_r, will be assumed to be the same as that for the spherical shell (4.62 in.).

II-2.1.2 Minimum Thickness of Nozzle Neck, t_m

$$t_{rn} = \frac{PR_n}{S_F E_n - 0.6P} = \frac{2160 \times 12.1875}{(14{,}520 \times 1.0) - (0.6 \times 2160)} = 1.99 \text{ in.}$$

The nozzle in this example will be installed in the cylindrical shell such that the studs will straddle the natural centerlines of the vessel. The reinforcement area will be checked in the plane containing the hole closest to the longitudinal axis of the vessel.

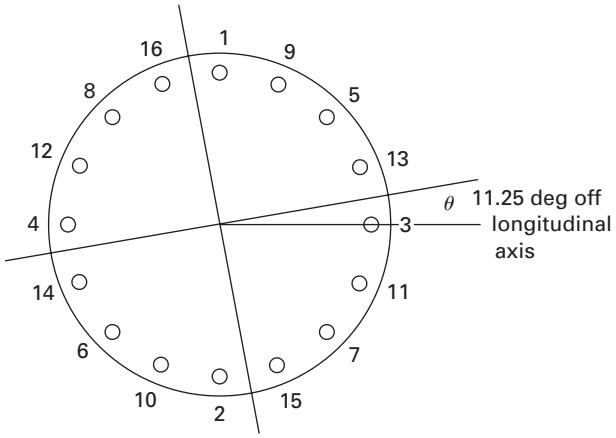

The forging contains 16 studs, thus the angle defined by adjacent studs is: 360 ÷ 16 = 22.5 deg.

Since the stud holes straddle the natural centerlines of the vessel, the angle θ from the longitudinal centerline to the adjacent stud hole is: 22.5 ÷ 2 = 11.25 deg.

From Fig. UG-37 of ASME BPVC Section VIII, Division 1 for angle θ of 11.25 deg, $F = 0.98$.

Required Reinforcement Area, A

$$A = 0.5 d t_r F = 0.5 \times 24.375 \times 4.62 \times 0.98 = 55.181 \text{ in.}^2$$

Available reinforcement

$$A_1 = 0.5 d\,(t - t_{rn}) = 0.5 \times 24.375\,(4.625 - 4.62) = 0.061 \text{ in.}^2$$

$$A_2 = \frac{1}{2}(h_o + h_i)(t_n - t_{rn}) = \frac{1}{2} \times (10.75 + 8.8577) \times (8.3125 - 1.99) = 61.985 \text{ in.}^2$$

$$A_3 = \frac{1}{2} b_3 \, h_3 = \frac{1}{2} \times 2.2114 \times 8.9375 = 9.8822 \text{ in.}^2$$

$$\Sigma A_n = A_1 + A_2 + A_3 = 0.061 + 61.985 + 9.8822 = 71.928 \text{ in.}^2$$

Subtract stud hole area from ΣA_n:

(a) For a 3 in. Stud Bolt

$$A_4 = (d_s \times \text{Stud Depth}) + \left[\frac{1}{2} \times d_s \times (d_s/2 \div \tan 59)\right] = (3 \times 4.5) + \left(\frac{1}{2} \times 3 \times 0.901\right) = 14.852 \text{ in.}^2$$

Therefore, available reinforcement

$$\Sigma A_n - A_4 = 71.928 - 14.852 = 57.076 \text{ in.}^2 > A$$

(b) For a $3\frac{1}{4}$ in. Stud Bolt

$$A_4 = (d_s \times \text{Stud Depth}) + \left[\frac{1}{2} \times d_s \times (d_s/2 \div \tan 59)\right] = (3.25 \times 4.5) + \left(\frac{1}{2} \times 3.25 \times 0.976\right) = 16.211 \text{ in.}^2$$

Therefore, available reinforcement

$$\Sigma A_n - A = 71.928 - 16.211 = 55.72 \text{ in.}^2 > A$$

Article 3.4
Flaw Excavation and Weld Repair

1 DESCRIPTION

Surface flaws [Fig. 1, illustration (a)] or embedded flaws [Fig. 2, illustration (a)] in base material or welds that exceed the allowances of the applicable code of construction or post-construction code can be removed by excavation [Fig. 1, illustration (b) and Fig. 2, illustration (b)]. The remaining cavity can be filled with weld filler metal [Fig. 1, illustration (c) and Fig. 2, illustration (c)], or left as is, under conditions described in this Article. Depending on the type and location of the flaw, and the type of base metal or weld material, excavation can be accomplished by mechanical removal methods (grinding, machining, lapping, honing, or flapping), or by thermal removal methods (thermal gouging). Descriptions of these excavation techniques are provided in Mandatory Appendix I.

2 LIMITATIONS

2.1 Additional Requirements

Part 1 of this Standard contains additional requirements and limitations. This Article shall be used in conjunction with Part 1.

2.2 Grinding

2.2.1 Grinding wheels shall not be forced or overloaded, in order to avoid the safety hazards from wheel failure. Furthermore, overloading the grinding wheel can cause areas of localized high temperature in the substrate being ground, leading in some cases to the formation of brittle untempered martensite, or tight, shallow surface cracks. Abusive grinding and uneven and rough finish can result in reduced fatigue strength or premature failure due to the introduction of large surface residual tensile stresses and stress risers. These problems normally can be avoided by using lighter grinding practices that avoid surface oxidation, evident through discoloration. It may be necessary to preheat some high strength alloy steels prior to grinding. Grinding wheels are manufactured to be used on specific materials (ferritic or austenitic steels, masonry, etc.). Therefore, only grinding wheels specifically designed to work on the material being ground shall be used. Rotary files should be considered for nickel alloys.

2.2.2 Grinding or cutting consumables used on carbon or low alloy steel materials will become impregnated with residues of those materials and become unsuitable for use with austenitic stainless steels. Abrasive cutting or grinding consumables should be segregated for use on carbon and low alloy steels from those used for austenitic stainless steel substrates. Surface contamination of austenitic stainless steel with carbon or low alloy steel residues can result in surface corrosion or pitting of the austenitic stainless steel. To avoid such problems, only grinding wheels designated as austenitic stainless steel grinding wheels shall be used on these materials.

2.2.3 When grinding out stress corrosion cracks in stainless steel, or in the case of steels that have suffered from anodic stress corrosion cracking (such as amine or caustic stress corrosion cracking), it is necessary to qualify and control the amount of heat generated to avoid making the cracks deeper and longer as a result of excessive heat. Steel contaminated with caustic or amines can also recrack during welding repairs or thermal cutting. Appropriate cleaning procedures shall be used prior to excavation or repair.

2.2.4 In tight spaces, burring tools may be used in place of grinding wheels.

2.3 Machining

When cutting fluids are used, care shall be taken to prevent their contact on surfaces where they may be detrimental. Furthermore, chips of the machined metal shall be controlled and kept from entering components where their presence can be detrimental.

2.4 Honing

The honing speeds shall be adjusted as a function of length-to-bore ratio of the component and its material hardness.

2.5 Flapping

2.5.1 Flapping should only be used to smooth or polish a surface. Flapping is unsuitable for removing defects other than superficial surface blemishes.

2.5.2 The abrasive marks of the flapper should be directed perpendicular to the direction of the preceding pass. Marks of the preceding pass should be removed prior to proceeding to the next finer grit. In this way, distortion of the surface will be minimized and smooth surfaces can be obtained.

Fig. 1 Excavation and Weld Repair of Surface Flaw

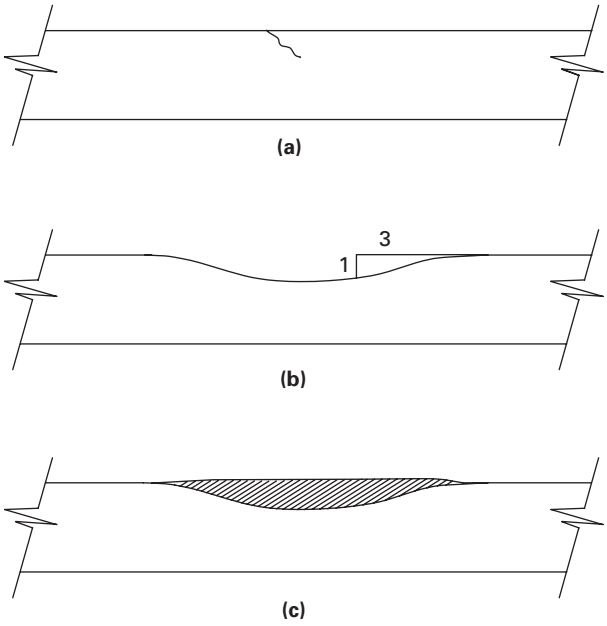

GENERAL NOTE: A 3-to-1 taper is not required when the cavity will be filled with weld metal.

Fig. 2 Excavation and Weld Repair of Embedded Flaw

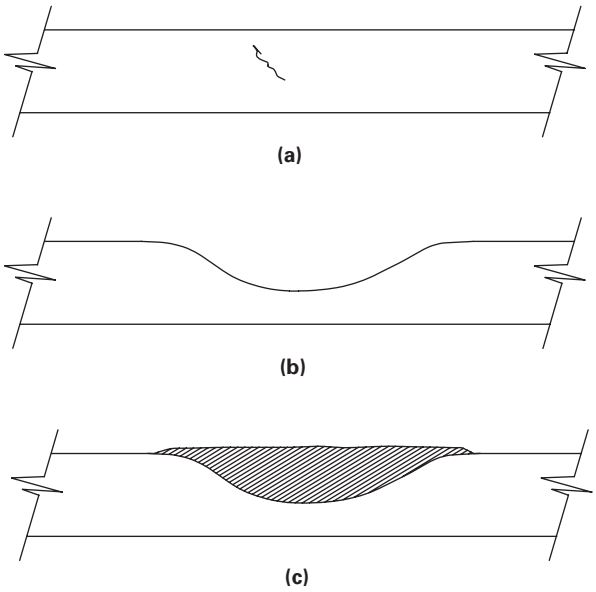

GENERAL NOTE: A 3-to-1 taper is not required when the cavity will be filled with weld metal.

2.6 Thermal Gouging

2.6.1 When thermal gouging by carbon arc or plasma arc, the very rapid heating to molten temperatures and subsequent quenching to ambient temperature can result in hardened or brittle heat-affected zones. This thermally affected material should be subsequently removed by a mechanical process, such as grinding.

2.6.2 For some materials it may be necessary to preheat the metal prior to arc gouging in order to prevent cracking, in particular materials that are required to be postweld heat treated by the code of construction or post-construction code.

2.7 Generalized Damage

This repair technique applies well to local defects. Where damage is extensive, such as general stress corrosion cracking of stainless steel, replacement should be considered.

3 DESIGN

3.1 Excavation Without Weld Deposit

Material or weld flaws open to the surface [Fig. 1, illustration (a)] or embedded flaws [Fig. 2, illustration (a)] are typically removed by a mechanical (abrasive) method (Fig. 3). If the remaining wall thickness of the excavation, with allowance for future corrosion, is greater than the minimum required wall thickness required by the applicable code of construction or post-construction code, such as the local thin area rules of API RP 579/ASME FFS-1, then the excavated area may be blended to a 3:1 or smoother profile slope, and left as-is for return to service.

3.2 Weld Deposition

When the removal of a flaw produces a remaining wall thickness below the limit permitted by the applicable code of construction or post-construction code, including allowance for future corrosion, then the cavity shall be repaired by deposition of weld metal [Fig. 1, illustration (c) and Fig. 2, illustration (c)] or analyzed for fitness-for-service. When the depth of material excavated necessitates a weld repair, the cavity shall be prepared for welding. Either during or following defect removal, the excavation shall be shaped to provide adequate access for the welding operation in order to facilitate proper fusion, and avoid slag entrapment, or lack of penetration. To minimize weld shrinkage stresses, the width of the cavity should only be as wide as needed to ensure defect removal and to facilitate welding as previously described.

3.3 Mechanical Excavation

If the excavation is performed using a thermal removal process (carbon arc or plasma arc gouging), an additional 1.5 mm ($\frac{1}{16}$ in.) of material shall be removed by

Fig. 3 Grinding of Weld Flaw

a mechanical removal process such as grinding, prior to the final inspection and before welding begins. This is necessary to remove any surface cracks, hardened material, scale, or carbon deposit.

4 FABRICATION

4.1 Repair Steps

The requirements specified in paras. 4.1.1 through 4.1.5 are generally followed to excavate a flaw.

4.1.1 Locate and expose the flaw. Characterize the flaw (size, depth, orientation) to the extent possible. If the flaw is a crack, the crack tips may be rounded by drilling to preclude crack from propagating during its excavation.

4.1.2 Remove the flaw by grinding, machining, honing, or thermal gouging. In selecting and applying a removal process, refer to the guidance in paras. 2 and 3 of this Article.

4.1.3 Verify defect removal by inspecting the cavity using visual examination (VT) and liquid penetrant testing (PT), magnetic particle testing (MT), or eddy current testing (ET) as appropriate. Measure the remaining wall thickness of the excavated cavity using an approved thickness measurement technique. If t-remaining is greater than the minimum required thickness as determined by a fitness-for-service evaluation, the excavation cavity need not be filled with weld deposit, as provided in para. 3.1.

4.1.4 When required by design (para. 3), repair the cavity by welding according to a qualified welding procedure specification (WPS), using a qualified welder, as required by the applicable code of construction or post-construction code.

4.1.5 Perform preheat or postweld heat treatment, when required by the applicable code of construction or post-construction code, as indicated by owner-user specification, or as dictated by service conditions.

4.2 Special Fixtures

In some cases, special fixtures may be required to accomplish precision work. In addition, it is often beneficial to develop special gages to monitor the depth of metal removal and to prevent excessive material from being removed. Special contour templates or common carpenter gages may be used and may be integrated into special fixtures.

5 EXAMINATION

5.1 Critical Service

In critical service applications, following a local repair, the final surface and adjacent area shall be examined using VT and PT, MT, or ET, in accordance with the

defect acceptance criteria of the applicable code of construction or post-construction code.

5.2 Volumetric Examination

Volumetric examination (RT or UT) shall be considered where there is a possibility of flaws introduced during repair welding, such as shrinkage cracks from deep weld repairs in thick sections.

5.3 Additional Examinations

Additional examinations shall be performed if required for similar welds by the applicable code of construction or post-construction code.

6 TESTING

6.1 Applicability

Generally, and unless specified otherwise in the applicable code of construction or post-construction code, weld repairs that have fully penetrated the component wall should be subjected to either leak testing or volumetric examination, or both, following the repair and any postweld heat treatment to verify the integrity of the repair.

6.2 Test Method

If a leak test is performed, it may be hydrostatic, pneumatic, sensitive leak, or in-service as required by the applicable code of construction or post-construction code.

6.3 Exemption

When the excavation does not fully penetrate the component pressure boundary, leak testing may be waived.

7 REFERENCES

ANSI B7.1, Safety Requirements for the Use, Care and Protection of Abrasive Wheels

ANSI B74.2, Specifications for Shapes and Sizes of Grinding Wheels, and for Shapes, Sizes and Identification of Mounted Wheels

ANSI B74.13, Markings for Identifying Grinding Wheels and Other Bonded Abrasives

Publisher: American National Standards Institute (ANSI), 25 West 43rd Street, New York, NY 10036

API RP 579, Fitness-for-Service

Publisher: American Petroleum Institute (API), 1220 L Street, NW, Washington DC 20005-4070

Article 3.4, Mandatory Appendix I
Metal Removal Process

I-1 FLAPPING

Flapping is a metal removal process involving a rotating tool fabricated of abrasive papers. Flapper wheels come in a variety of grit sizes and should be worked from the more coarse grit to the finer grit.

I-2 GRINDING

(a) Grinding is the process of abrading the surface of a material for the purpose of removing portions of the material. The process is used to remove localized cracks, pits, deposits, hardened surfaces, etc. Equipment used for grinding includes pencil or small disc grinders to remove local defects, and large disc or wheel grinders to remove larger defects. The grinding equipment can be electric or air-driven; with wheels of various shapes, sizes, and abrasive characteristics.

(b) Every grinding wheel has two constituents: the abrasive that does the cutting and the bond that holds the abrasive component. Variations of these components can be selected to give a wide range of grinding characteristics. The three American National Standards Institute (ANSI) standards that provide specifications for grinding wheels are as follows:

(1) ANSI B74.13, Markings for Identifying Grinding Wheels and Other Bonded Abrasives

(2) ANSI B74.2, Specifications for Shapes and Sizes of Grinding Wheels, and Shapes, Sizes, and Identification of Mounted Wheels

(3) ANSI B7.1, Safety Requirements of the Use, Care, and Protection of Abrasive Wheels

(c) Manual grinding is generally divided into one of three categories:

(1) Rough grinding — relatively rapid removal of excess weld metal or base material using coarse abrasives.

(2) Polishing and blending — achieving a semi-smooth finish, using medium abrasives.

(3) Buffing — achieving a lustrous and reflective finish, using fine abrasives usually in a paste or liquid vehicle.

I-3 HONING

(a) Honing is an abrasive process that is used to obtain a fine finish on the inside surface of a cylindrical component.

(b) Honing tools are placed in the bore of the component and a radial load is applied such that the honing stones are in contact with the bore surface. The hone is then rotated in the bore, generating a high-quality surface.

(c) Honing stones generally are manufactured of aluminum oxide, silicon carbide, or diamond abrasive grits, held together by vitrified clay, resin, or a metal bond. The grain and grade of abrasive to be used is based on the amount of stock to be removed and the surface finish desired. Silicon carbide is generally used for cast iron, while aluminum oxide is generally used on steel. As with grinding discs and lapping compound, the finer the grit, the finer the surface finish.

I-4 LAPPING

(a) Lapping is a polishing technique that can be used to prepare surfaces requiring a very smooth finish. Lapping is not economical for removing deep defects. A general rule of thumb is that lapping methods are suitable for shallow defects less than 0.05 mm (0.002 in.). Defects located greater than this depth should be removed by other methods.

(b) Lapping machines are available as portable or bench-type systems. In many cases, lapping is performed with special discs or plates made specifically for a given type of application. These plates are normally very thick to maintain dimensional stability. After defect removal, the surface should be lapped to the finish and dimensions specified by the design.

I-5 MACHINING

(a) Machining using portable equipment can provide for defect removal and weld preparation in a single step. Machining with mechanized cutting equipment is used to remove defects with precision. Machining equipment used to remove defects or prepare a surface for repair include boring bars, milling machines, magnetic drills, flange facers (portable lathes), and pipe cutting and beveling machines. Machining has the advantage of cutting and forming the weld preparation with a single piece of equipment while closely controlling dimensional tolerances.

(b) Portable boring bars have been used where circumferential machining of a bore is required, such as in valve maintenance. Other bars are available with accessories to grind or mill unique geometries, and to drill and tap stud holes.

Fig. I-1 Boat Sample

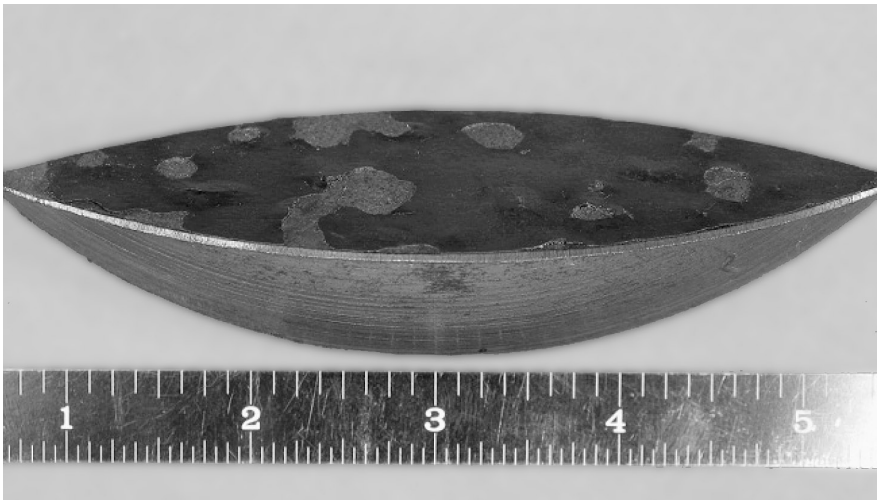

(c) Portable milling machines can be used to remove localized materials at a faster rate than machines mounted on the component outer or inner diameters. Small milling machines have been developed to operate in relatively restricted locations.

(d) Machining generally involves the use of cutting fluids that perform several functions including lubrication, cooling, and chip removal.

I-6 THERMAL GOUGING

(a) In situations where defects are found to be extensive and where accuracy is not critical, thermal gouging (carbon arc gouging or plasma arc gouging) can be used effectively.

(b) Thermal gouging techniques are thermal removal processes that involve localized melting of the metal, which is quickly swept away by the force of high velocity air or gas jets.

I-7 BOAT SAMPLE CUTTING

(a) Boat samples are metal samples in the shape of a boat hull that are cut out from base metal, weldments, or weld heat-affected zones (Fig. I-1). The process can be used for removal of weld defects, but is more commonly used for obtaining samples of base materials or welds for metallurgical or mechanical testing.

(b) Boat sample cutters, sometimes referred to as *weld probers* or *trepanning machines*, are mechanical devices designed to remove a portion of a weld or metal plate by saw cutting from the plate surface. The machine is a saw with a dished shape blade, capable of excavating and removing a boat-shaped specimen from a flat surface in any position.

(c) Boat sample cutters can be air powered or electric motor driven. They are portable devices that are easily mounted on the surface of the material to be excavated by means of four anchoring bolts welded to the surface. Shim spacers are used to adjust the width and depth of cut by controlling the space between the saw mounting frame and the surface of the plate.

(d) Once securely mounted on the anchor bolts, the cutting process begins by making a single cut at the edge of the material to be excavated. The curved blade is fed into the material until the desired depth is achieved and the saw circumference is at right angles to the joint. The blade is then retracted, the saw rotated 180 deg and a second cut is made. The two cuts meet automatically in the same plane and the excavation is complete.

(e) Boat samples can be cut either longitudinal or transverse with respect to the weld joint. They are boat shaped and the cut sides have a spherical curvature. The size varies in proportion to the thickness of the plate being cut; however, specimens can range from a small size of $\frac{1}{8}$ in. depth × $2\frac{3}{8}$ in. length × $\frac{3}{8}$ in. width to a large size of 1 in. depth × $4\frac{3}{4}$ in. length × $1\frac{1}{2}$ in. width. Larger specimens can be excavated with specially designed equipment.

(f) The excavated boat samples are large enough to allow for various mechanical testing processes. Cross sections of the "boats" can be used for hardness testing or metallographic inspection. Full-length specimens can be machined for tensile testing, bend testing, or Charpy V-notch impact testing.

(g) Once the boat sample has been removed, the cutter can be detached from its mounted position and the anchor bolts can be removed from the plate surface. The cavity left by the removal of the excavated boat sample is very conducive to repair welding. The tapered nature of the cavity ends and the sloping curvature of the cavity walls allow complete and easy access for most welding processes.

Article 3.5
Flange Repair and Conversion

1 DESCRIPTION

1.1 Introduction

This Article applies to the refinishing of flange faces to repair mechanical imperfections or damage from corrosion or other damage in service, or to changing the flange face finish to enable the use of a different gasket. The surface finish of a flange contact surface is essential to the leak tightness of the gasketed joint. When surface finish deteriorates in service, it can become necessary to either replace the flange or refinish the flange face.

1.2 Work Location

The repair can be performed in situ using a portable machine tool, or the pipe section or equipment containing the damaged flange can be removed and repaired in the shop.

2 LIMITATIONS

2.1 Additional Requirements

Part 1 of this Standard contains additional requirements and limitations. This Article shall be used in conjunction with Part 1.

(08) 2.2 Recurrence of Damage

Flange refinishing will restore the flange facing but may not eliminate the cause of the initial imperfection or damage. Therefore, the imperfection or damage may recur. Consideration shall be given to the possible recurrence of the original imperfection/damage mechanism.

2.3 Remaining Thickness

The flange may not be sufficiently thick to permit metal removal by machining and still meet the minimum thickness required for the design pressure rating. In such a case, it will be necessary to increase the flange ring thickness by weld metal buildup before remachining the surface. As an alternative solution, a split ring flange may be added to the back of the existing flange to compensate for reduced flange ring thickness, where geometry and spacing permits, and as qualified by the appropriate design calculations.

2.4 Residual Stress

The machining of weld overlayed or weld built-up surfaces that have not been stress-relieved may cause the redistribution of residual stresses and subsequent dimensional distortion over time. In such instances, precautions such as performing a stress-relieving heat treatment prior to finish machining shall be considered to ensure final dimensional stability.

3 DESIGN

3.1 Raised Face (08)

Under-thickness of a raised face due to refinishing shall be acceptable, provided the minimum finished height of the raised face is 0.8 mm (0.031 in.).

3.2 Thickness Evaluation

If flange refinishing necessitates removal of material from other than the raised face such that the flange dimensions no longer comply with the original design dimensions minus the original corrosion allowance or the requirements of an applicable specification or standard, the flange shall be evaluated to ensure that the removal of material does not compromise design integrity. Design evaluation methods of an applicable new construction code (such as ASME BPVC Section VIII, Division 1, Appendix 2), or an applicable post-construction code or standard, shall be used.

3.3 Finish and Flatness

The gasket seating requirements in terms of flange surface finish and flatness shall be considered.

3.3.1 Flatness. For example, API 660 and TEMA permit deviations from flatness that exceed those that are recommended for certain gasket types of materials (e.g., flat metal). For guidance on flange face flatness tolerance, refer to Appendix D of ASME PCC-1.

3.3.2 Finish. See TEMA Fig. F-4 for permissible imperfections in flange-facing finish. The choice of flange-facing finish shall be in accordance with the applicable standard and compatible with the requirements specified by the user or recommended by the gasket manufacturer. For example, unless otherwise agreed to by the purchaser or manufacturer, ASME B16.5 specifies the following flange-facing finishes (as judged by visual comparison with *Ra* standards per ASME B46.1):

(a) Tongue and groove and small male and female flanges: not to exceed 3.2 μm (125 μin.) roughness.

(b) Ring joint: not to exceed 1.6 μm (63 μin.) roughness.

(c) Other: Either a serrated concentric or serrated spiral finish having a resulting surface finish from 3.2 μm to 6.4 μm (125 μin. to 250 μin.) average roughness shall be furnished. The cutting tool employed should have an approximate 1.5 mm (0.06 in.) or larger radius and there should be from 1.8 to 2.2 grooves/mm (45 to 55 grooves/in.).

4 FABRICATION

4.1 Repair Without Welding

If either the flange ring thickness or hub dimensions, or both, are sufficient, then the entire gasket surface may be machined to remove the area of degradation or imperfection and achieving the desired finish without weld metal buildup.

(08) 4.2 Repair by Welding

In repairing a flange face, it may be necessary to use weld metal to either fill a local area (for example, a gouge or a scratch) or to weld buildup the base metal or existing weld overlay face. Where the flange is to be repaired by welding, the area where the buildup is to be applied shall be free of any residue, corrosion deposits, etc., that would unduly affect the weld. Cleaning may be by mechanical or chemical procedures. Welding procedures and welder qualifications shall comply with the requirements of an applicable new construction code (such as ASME BPVC Section IX), or an applicable post-construction code or standard. Where weld metal buildup is necessary, the filler metal, welding technique, welder qualifications, and heat treatment (if any) shall be selected to meet service and metallurgical requirements. Surface contaminants remaining on the flange face, such as gasket material residue or corrosion deposits, can result in weld defects such as porosity or inclusions and shall be removed prior to performing any weld metal buildup operation.

4.3 Postweld Heat Treatment

When weld metal buildup is required, postweld heat treatment shall be performed prior to flange face machining if required by an applicable new construction or post-construction code. Postweld heat treatment is not required if the thickness of the weld metal buildup is less than the maximum allowable fillet weld throat thickness unless dimensional stability is an issue, or postweld heat treatment is required for process reasons.

4.4 Machining

The cutting tool radius and feed rate should be set to prequalified values in order to consistently achieve the desired surface finish. For minor imperfections, careful filing may be adequate for the removal and dressing of the flange faces.

4.5 Conversion (08)

In preparation.

5 EXAMINATION

5.1 Gasket Surface

The finished surface shall be examined to comply with the requirements of the standard applicable to new flanges or as specified by the user. For example, ASME B16.5 requires that the surface finish be judged by visual comparison with the *Ra* standards of ASME B46.1.

5.2 Nondestructive Examination

In cases where weld metal buildup is used in the repair, the area to be repaired shall be examined prior to performing the weld buildup using an appropriate NDE method to determine the integrity of the base metal. Consideration shall be given to examining each weld pass for surface defects by either magnetic particle examination (MT) or liquid penetrant examination (PT), as appropriate. For example, such examination should be performed for welds susceptible to cracking. The finished machined surface shall also be examined by MT or PT, and imperfections in excess of the standard applicable to new flanges, or as specified by the user, shall be repaired and reexamined by the method that discovered the imperfection. Guidelines for nondestructive examination can be found in ASME BPVC Section V. The MT or PT examination shall be conducted in accordance with Appendix 6 or Appendix 8, respectively, in ASME BPVC Section VIII, Division 1, or other applicable construction code, e.g., ASME BPVC Section VIII, Division 2.

5.3 Dimensions

After repair, the flange thickness and other dimensions shall be verified for conformance to the required thickness of the applicable standard or as established by design calculation.

6 TESTING

After the flange joint is reassembled in the field, it should be subjected to a leak test prior to being placed in service, or an initial service leak test. An initial service leak test is one in which the joint is monitored for leakage as pressure is increased in the system. The selection of the most appropriate testing method shall consider the hazard of the service and any jurisdictional requirements. For general guidance on flanged joint leak tightness testing, refer to Section 13 of ASME PCC-1.

7 REFERENCES

7.1 Flange Standards

API 660, Shell and Tube Exchangers for General Refinery Service

Publisher: American Petroleum Institute (API), 1220 L Street NW, Washington, DC 20005-4070

ASME B16.1, Cast Iron Pipe Flanges and Flanged Fittings
ASME B16.5, Pipe Flanges and Flanged Fittings
ASME B16.24, Bronze Pipe Flanges and Flanged Fittings: Class 150, 300, 400, 600, 900 and 1500
ASME B16.36, Orifice Flanges
ASME B16.47, Large Diameter Steel Flanges NPS 26 Through NPS 60

Publisher: The American Society of Mechanical Engineers (ASME), Three Park Avenue, New York, NY 10016-5990; Order Department: 22 Law Drive, P.O. Box 2300, Fairfield, NJ 07007-2300

Standards of Tubular Exchanger Manufacturers Association

Publisher: Tubular Exchanger Manufacturers Association, Inc. (TEMA), 25 North Broadway, Tarrytown, NY 10591

Article 3.6
Mechanical Clamp Repair

1 DESCRIPTION

A mechanical clamp consists of split fittings mechanically joined together to seal off or reinforce a component.

Examples of mechanical clamps are illustrated in Figs. 1 and 2.

Mechanical clamps are commonly used to seal repair-leaking components or reinforce damaged components.

Mechanical clamps can have a variety of shapes (e.g., cylindrical, rectangular, with either flat or formed heads), often following the contour of the pipe or component being repaired. Mechanical clamps can also be used to enclose components such as flanges and valves or fittings, branches, nozzles, or vents and drains.

Mechanical clamps are often available as catalog items or they can be custom-made of two half shells, a sealing gasket and bolts, or studs and nuts.

The annular space between the mechanical clamp and the repaired component can be left either empty or filled, or lined with epoxy, sealant, fiber, refractory materials, or other compounds.

A clamp can be nonstructural (designed to contain leaks) or structural (designed to reinforce and hold together a damaged component).

Fig. 1 Example of a Mechanical Clamp

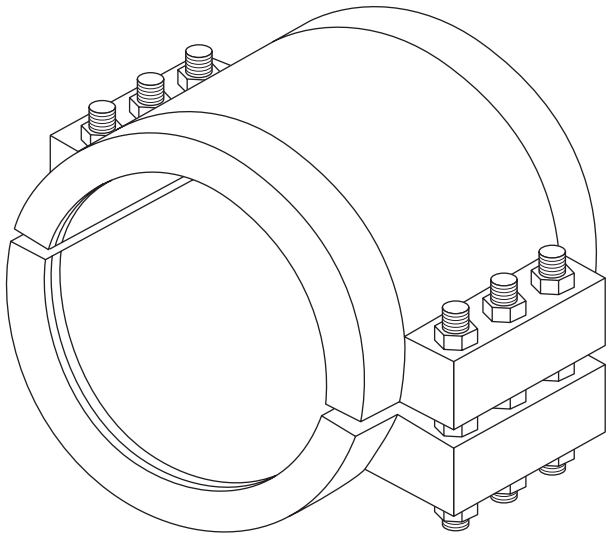

2 LIMITATIONS

2.1 General

Part 1 of this Standard contains additional requirements and limitations. This Article shall be used in conjunction with Part 1.

2.2 Applicability

Normally, mechanical clamps are used to contain leaks at packings, and at flanged and gasketed joints, or to contain leaks (or potential leaks) due to local thinning. The clamp is not always effective in preventing the propagation of a crack in the pipe or component. Therefore, leak clamps shall not be used when cracks are present, unless

(a) the conditions that lead to the crack formation and propagation have been eliminated so that the crack will not grow during the planned life of the repair;

(b) a fitness-for-service assessment shows that the crack growth during the planned life is acceptable, and that the crack will not propagate across the clamp; or

(c) the crack is circumferential and the clamp is a structural clamp, where the clamp is designed for the case of full circumferential separation of the cracked component. A separate strong-back assembly may be used to provide structural integrity, while the clamp only provides leak seal. It is common for these two items to be independent, though used in concert.

2.3 Qualifications

Installation and sealant injection, where necessary, shall be performed by personnel qualified under conditions representative of the field application.

2.4 Safety

Personnel shall be aware of hazards in installing clamps on degraded components, and shall take the necessary precautions to avoid unacceptable risks. A risk review shall be conducted before a clamp is installed. Personnel shall take any necessary precautions to avoid unacceptable risks.

2.5 Precautions

If the component is leaking or has the potential to leak during installation, and if the contents are hazardous, additional precautions should be taken and those precautions should be addressed during the prejob hazard review meeting (e.g., need for fresh air suit, etc.).

Fig. 2 Square Mechanical Clamp Over Drain Branch, With Sealant Injection Nozzle

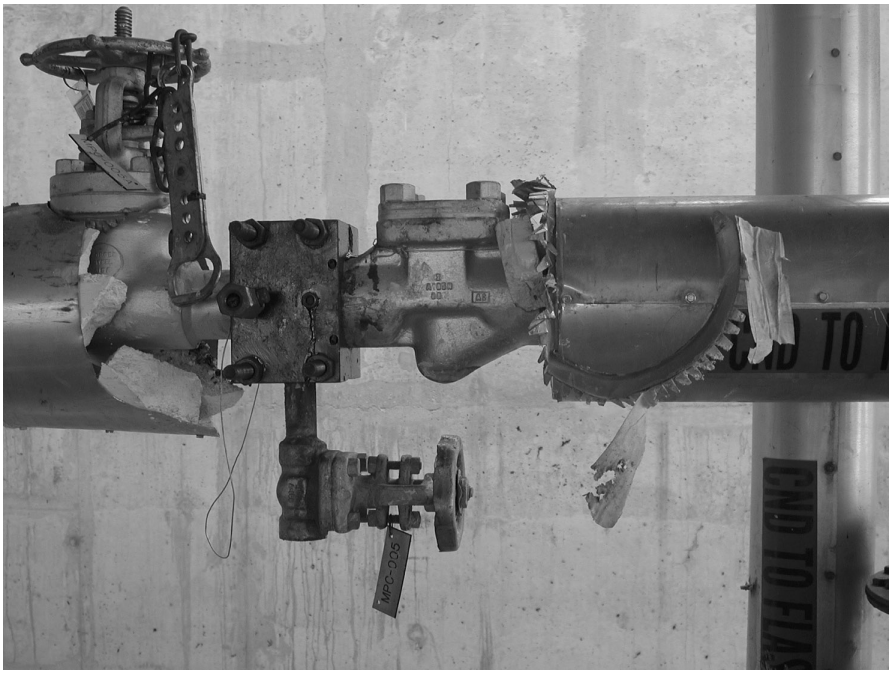

3 DESIGN

3.1 Materials

Clamp materials shall be listed in the construction or post-construction code, Figs. 1 and 2, and be compatible with the fluid, pressure, and temperature, with due consideration for the stagnant condition created by a leak of fluid into the clamp. The mechanical clamp sealing element and its lubricant may prevent its use in high-temperature service. Generally, the material of construction of the clamp should be similar to the clamped component. Clamps made of different materials shall be acceptable if they are compatible with the process and existing components. The clamp design and construction, including material selection, shall be done considering the deterioration mode that led to the need for the repair. The clamp shall be suitable for resisting this deterioration mode for the life of the repair.

3.2 Design Life

The design life of the repair shall be based on the remaining strength of the repaired component, the corrosion resistance and mechanical properties of the clamp, its sealing elements and, where used, the sealant. Some sealants lose their sealing properties as a hot line is cooled down, or the sealant can deteriorate over time. This shall be considered if leaving the clamp in place for a new heat-up cycle or beyond the manufacturer's designated time at temperature.

3.3 Failure Modes

The clamp design shall consider the potential introduction of new failure modes in the clamped component. For example:

(a) External parts of the repaired component, now enclosed by the clamp, such as flange bolts, that could significantly degrade, crack, or corrode if in contact with the leaking fluid.

(b) Because the clamp can be at a lower temperature than the component, condensate from leakage gases should be considered for its corrosive effects.

(c) The clamp can cause the component to run at a different temperature, which can increase the corrosion rate or cause dew-point corrosion.

(d) Process fluid contact or the insulating effect of the clamp may increase the temperature of encapsulated bolting, causing it to yield.

(e) The development of operating and residual stresses due to constrained differential expansion can cause the clamp to leak.

3.4 Temperature and Toughness

The clamp materials shall satisfy the minimum temperature and, where applicable, minimum toughness requirements of the applicable code of construction or post-construction code.

3.5 Design Conditions

Mechanical clamps, sealing surfaces, and bolting shall be designed for design conditions and anticipated transient loads imposed on the repaired pipe or component, following the design requirements of the construction or post-construction code.

3.6 Qualification

In cases where there are no applicable design requirements, the principles of the applicable code of construction or post-construction code shall be followed. Components of the mechanical clamp that are fabricated by machining standard fittings (such as cutting-out an opening in standard pipe caps to make end pieces) shall be qualified by analysis or testing, as provided in the applicable code of construction or post-construction code, and be reinforced if necessary.

3.7 Corrosion Allowance

The design of the clamp shall include the applicable corrosion allowance, consistent with the service and the design life of the repair.

3.8 Design Loads

The design of the mechanical clamp for normal operating conditions shall consider the following:

(a) the coincident maximum and minimum pressures and temperatures of the system, unless means are provided to limit the pressure in the mechanical clamp. Designing the clamp for a lower range of design and operating temperatures than the component is acceptable if justified by heat transfer analysis.

(b) the load imposed by the weight of the clamp, including the entrapped leaking fluid and annular space material.

(c) the effects of expansion, including differential expansion or contraction, and the effect on the flexibility of the pipe or component. On insulated lines and components the clamp may also be insulated to minimize differential expansion.

3.9 Transient Loads

Anticipated transient loads for use in the design of structural clamps shall include, but are not limited to

(a) thrust loads, in case of full circumferential separation of the pipe or component. Design for the axial thrust resulting from full circumferential separation may be waived, provided the calculated remaining strength of the degraded component at the end of the design life (including expected continuing degradation in service) is determined to be sufficient. Additional restraints may be added to the pipe or component to reduce the loads on the clamp.

Where a clamp is intended to restrain longitudinal forces, a locking mechanism or strong-back shall be provided to prevent separation. Friction should not be relied on to hold together damaged or separated components in a fluid service that is flammable, toxic, or damaging to human tissues, or if the components operate in the creep range, unless a risk analysis documents that the risk of failure of the clamped joint is acceptable.

(b) wind, earthquake, or fluid transients (fluid hammer or liquid slug), as applicable.

3.10 Vents and Drains

When repairing a leaking component, the mechanical clamp assembly should be designed with vents and drains to permit venting the leak while assembling the clamp, then draining the annulus as necessary.

(a) Vents should also be provided for mechanical clamps installed under water to avoid over-pressurizing the water trapped in the annulus as the clamp is tightened.

(b) The vent or drain should include a threaded cap, a flange, or a valve that will be opened to preclude internal pressure buildup during assembly. This same vent or drain may be used to vent or drain the clamp in the future. If leak sealant material is to be injected into the clamp, these vent and drain connections may be used, or separate injections may be provided.

3.11 Sound Metal

The clamp shall be sufficiently long to extend to a sound area of the repaired component. The clamped component shall be examined to ensure that there is sufficient wall thickness at the clamp contact points to carry the pressure and structural loads in the component, plus the additional loads imposed by the clamp.

3.12 Sealant Pressure

If using sealant injection, the possibility of inward collapse of the clamped component due to the annulus pressure of the injected sealant shall be considered.

Consideration should be given to off-gassing of sealant compounds as they cure.

3.13 Sealant Seepage

If using sealant injection, the possibility and consequence of sealant seeping into the damaged component shall be considered.

3.14 Joints

Clamps over expansion joints, slip joints, ball joints, etc., are special cases that shall require analysis of the loads in the pipe system, anchors, and component nozzles with the clamp installed, with due consideration for thermal-induced movements in operating and shutdown conditions.

4 FABRICATION

4.1 Preparation

The component to which the clamp will be attached should be free of loose corrosion deposits, dirt, paint,

insulation, mastics, and other coatings in the vicinity of the mechanical clamp installation, in particular the area where the sealing surfaces will contact the pressure component. These substances can prevent the sealing surfaces from seating properly against the pressure component or otherwise generate a leak path under the sealing surfaces. Clamps using sealant injection will generally overcome these concerns.

4.2 Leak Box Installation

Care shall be taken so as not to damage the clamp, especially the sealing surfaces. For small leaks, the clamp can typically be placed directly over the leak. Larger or higher pressure installations typically require the mechanical clamp be loosely installed on the component to the side of the leak and then slid and tightened over the leak.

4.3 Qualification

Personnel shall be qualified for installing the repair clamp and sealant injection, when sealant is applied.

4.4 In-Service Installation

The clamp may be installed when the system is out of service or, with the necessary safety procedures, in service.

4.5 Leak Stoppage

If a mechanical clamp is installed over a thinned or leaking component, consideration should be given to wrapping the component with fiberglass, composite, or metallic wraps such that the leak can be stopped prior to installing the clamp. This will also prevent introducing sealant into the process. This may also aid in future sealing, if the perimeter starts leaking.

4.6 Welding

The mechanical clamp may be welded to the component. In this case, the welding, examination, and testing provisions for leak repair boxes shall be reviewed for applicability to the repair.

5 EXAMINATION

5.1 Applicability

The final bolting torque shall be checked where specified by design.

5.2 Visual Examination

The assembly shall be visually examined for conformance with the design.

5.3 Evaluation

Results of examinations should be evaluated following the criteria of the applicable code of construction or post-construction code.

6 TESTING

6.1 Applicability

The designer shall determine the type of pressure or leak test to be conducted after installation, on the basis of risk — likelihood and consequence of failure of the repaired component when pressurizing the annulus between the clamp and the component.

6.2 Test Method

The test may consist of one of the following:

(a) an in-service leak test if the consequence of an in-service leak out of the clamp is acceptable

(b) a hydrostatic test (when hydrostatically testing a repair on a hot operating system, caution is required to avoid the discharge of flashing test water)

(c) a pneumatic pressure test

(d) a sensitive leak test (such as air with bubble solution, or helium leak test)

7 REFERENCES

API 510, Pressure Vessel Inspection Code: Maintenance, Inspection, Rating, Repair and Alteration

API 570, Piping Inspection Code: Inspection, Repair, Alteration, and Rerating of In-Service Piping Systems

Publisher: American Petroleum Institute (API), 1220 L Street, NW, Washington, DC 20005-4070.

ASME Boiler and Pressure Vessel Code, Section VIII — Rules for Construction of Pressure Vessels

Publisher: The American Society of Mechanical Engineers (ASME), Three Park Avenue, New York, NY 10016-5990; Order Department: 22 Law Drive, P.O. Box 2300, Fairfield, NJ 07007-2300

Article 3.7
Pipe Straightening or Alignment Bending

1 DESCRIPTION

This Article addresses the requirements and cautions for the straightening of bent metallic pipe and intentional bending of metallic pipe to accommodate alignment, fit-up, or repair. Straightening and alignment bending can be achieved by hot bending, cold bending, or by heating and cooling.

2 LIMITATIONS

2.1 General

Part 1 of this Standard contains additional requirements and limitations. This Article shall be used in conjunction with Part 1.

2.2 Buckling Prevention

If the pipe is lined, or is prone to buckling (e.g., if its outer diameter divided by its wall thickness D/t is larger than 100), an engineering evaluation shall be performed prior to attempting the straightening operation.

2.3 Materials

An engineering evaluation should be conducted to validate that the pipe and weld material properties are not adversely affected by heating or bending. See paras. 2.3.1 and 2.3.2.

2.3.1 Heating or deformation of the pipe may cause the loss of corrosion or cracking resistance, such as the sensitization of solution-annealed austenitic stainless steels, or the accumulation of residual stresses that can lead to stress corrosion cracking in caustic service.

2.3.2 Heating enhanced strength and toughness low alloy steels and hardenable high alloy steels above their final heat treatment temperature may degrade mechanical properties.

2.4 Linings and Coatings

The bending operation may damage internal linings or external coatings.

2.5 Hazards Review

The need for a hazards review should be considered prior to hot or cold bending, to address the limitations in this Article, and other facility and system-specific considerations.

3 DESIGN

3.1 Preventing Recurrence

An investigation into the cause of damage should be completed and appropriate corrective action should be implemented to prevent future damage.

3.2 Analysis

The straightening operation should be designed by an experienced piping design engineer. The operation shall avoid placing significant loads on nozzles, equipment, components, or supports in excess of their design capacity.This may be achieved by applying the planned movement to a stress analysis model of the piping, obtaining reaction forces at nozzles, equipment, components, and supports and verifying that these remain within acceptable limits, as specified by equipment, component, and support manufacturer or by the design rules of the applicable code of construction or post-construction code. Calculated stresses in the pipe itself and at pipe welds may be large, because the bending process will plastically deform the pipe. Large stresses in the pipe itself or in the pipe weld, away from nozzles, equipment, components, or supports may be acceptable, provided other conditions specified in this Article are met.

3.3 Load and Deformation Limits

Applied loads and deformations at mechanical joints such as flanged joints, threaded joints, swage fittings, expansion joints, or compression fittings shall be within the joint design and manufacturer limits.

3.4 Residual Chemicals

If residual process chemicals could present a safety hazard at the bending temperature, either directly or by degrading the piping material, the bending procedure shall be reviewed for potential hazards, prior to starting the work. The review shall validate that the residual chemicals, when heated, will neither degrade the pipe nor cause a hazardous condition. Otherwise, the pipe shall be thoroughly cleaned prior to hot bending.

4 FABRICATION

4.1 Methods

Straightening a pipe may be performed by pushing or pulling the pipe back into the desired position, either

using a pipe-bending machine or jacks and pulling devices; or by locally heating the pipe and then cooling it to achieve the desired shape, applying the precautions specified in this Article.

4.2 Surface Protection

When using jacks or pulling devices, a pad should be used between the chain or rope and the pipe to avoid excessive friction, wear, local stresses, or dents and gouges on the pipe surface. Where possible, local straining of the pipe should be avoided by distributing the straightening or alignment force over a wide area.

4.3 Hot or Cold Bending

Pipe may be straightened by hot or cold bending, provided all the cautions and conditions of this Article are met.

4.3.1 The hot bending refers to bending of ferritic steels at a temperature above the lower critical temperature of the material T_{crit}. The lower critical temperature is the lowest temperature at which the crystal structure first begins to undergo an allotropic transformation from a body-centered cubic (BCC) atomic structure to a face-centered cubic (FCC) atomic structure. The approximate lower critical temperature for carbon steel pipe is 705°C (1,300°F).

Creep-enhanced low alloy ferritic steels such as those included in P-No. 5B, Group 2 of ASME BPVC Section IX, should not be hot bent. These materials are sensitive to heating above their lower transformation temperature, which is a function of their chemical composition. Heating these materials above their lower transformation temperature could result in the loss of their high-temperature properties.

When using heat on piping that has been in service, either for hot bending or for local heating during cold bending, the heating process shall be selected (e.g., using heating pads rather than a cutting torch) and controlled (e.g., using temperature-indicating markers or thermocouples) to prevent unintended metallurgical transformation or stress damage. A documented heating and temperature control procedure shall be followed.

4.3.2 Cold bending refers to bending below T_{crit}. The pipe may be bent cold if permitted by the applicable code of construction or post-construction code. Cold bending may require heating below the critical temperature; heating is usually on the side that needs to be shortened and is applied in a diamond pattern.

4.4 Heat Treatment

Poststraightening heat treatment of cold-bent or hot-bent pipe shall be performed where required by the applicable code of construction or post-construction code or material specification for the bending of new pipe, or when required for corrosion resistance.

5 EXAMINATION

5.1 Applicability

After straightening or bending the pipe, the examinations specified in paras. 5.1.1 through 5.1.4 shall be considered.

5.1.1 Ultrasonic thickness examination to verify that the wall thickness is at or above the minimum required by the applicable code of construction or post-construction code plus corrosion allowance. This examination should be performed at the outside radius (points placed in tension by bending) at points of maximum bending.

5.1.2 Visual examination to verify that the straightened pipe is free of wrinkles, creases, dents, gouges, peaks, and other signs of damage. If damage is noted, the damage may be assessed using the criteria of the Pipe Fabrication Institute's Engineering Standard ES-24, *Pipe Bending Methods, Tolerances, Process and Material Requirements*, and the applicable code of construction or post-construction code.

Where surface finish is specified in the design, it shall be verified after the straightening or bending operation.

The visual examination shall also address the integrity of lining and coating.

5.1.3 Dimensional examination for ovality (largest relative difference of diameters at a cross section of the pipe) to verify that it is not more than that permitted by the applicable code of construction or post-construction code.

5.1.4 Hardness testing after hot bending (or local heating) of heat-treatable pipe, to validate that heating has not unduly altered the material properties, is in order. The hardness shall be limited to values specified in the applicable code of construction or post-construction code, or as specified by the design or by the materials and corrosion engineer.

5.2 Weld Examination

If the straightened pipe contains welds (longitudinal or girth welds) these welds shall be examined for code rejectable indications by either magnetic particle or liquid penetrant method, as appropriate, and evaluated in accordance with the applicable code of construction or post-construction code.

6 TESTING

6.1 Applicability

The straightened pipe shall be pressure tested, if required by the applicable post-construction code.

6.2 Special Consideration

Consideration should also be given to whether the risk of a leak or rupture on startup justifies pressure or leak testing in the absence of code requirements.

6.3 Alternative

In the absence of pressure testing, an initial service leak test should be considered, consisting of visual examination for leaks in liquid or steam service, or bubble testing for gas service.

7 REFERENCE

Standard ES-24, Pipe Bending Methods, Tolerances, Process and Material Requirements

Publisher: Pipe Fabrication Institute (PFI), 666 Fifth Avenue, New York, NY 10103

Article 3.8
Damaged Anchors in Concrete (Postinstalled Mechanical Anchors)

1 DESCRIPTION

1.1 Anchor Uses

Anchors are needed for most base plates. They are used to safely anchor base plates to prevent column overturning and they are also necessary when the base plate is subject to large design moments or uplift. Anchors are primarily tension devices. To prevent the anchor from pulling out of the concrete, should the bond stresses be exceeded, hooks, plates, or other shapes are added to the embedded portion of the anchor.

1.2 Intent

This Article is generally written with regards to repairing column base mechanical anchors. Therefore, the emphasis of this Article is on postinstalled mechanical anchors as described in para. 1.6. However, it is intended to apply to repairing pressure vessel support anchors, such as, support skirts and saddle supports.

1.3 Types of Mechanical Anchors

There are two general types of mechanical anchors: cast-in-place and drilled-in. Three different types of cast-in-place anchors are shown in Fig. 1. These are generally made from either bolts or bar stock, referred to as a rod. The commonly used hooked rod is made from a round shape and shown in Fig. 1, illustration (a). The tensile load is resisted through a bond developed along the length and by the hook. Smooth rods do not always form reliable bonds due to oil or other contaminants that may exist on the rod. Those with hooks may fail by straightening and pulling out of the concrete. A more positive anchorage is often preferred.

Fig. 1 Anchors

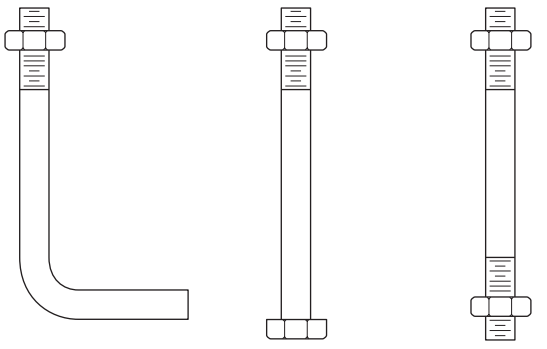

(a) Hooked Bar (b) Bolt (c) Threaded Bar With Nut

1.4 Illustrations

A more positive anchorage is formed when bolts or rods with threads and a nut are used, as shown in Fig. 1, illustrations (b) and (c). Bearing on the head or nut then develops the anchorage. It is only necessary to provide for adequate embedment depth and edge distance. Since headed bolts are not often available in lengths and diameters required for base plates, the designer should generally specify the rod with threaded ends and provision of a nut for anchorage, as shown in Fig. 1, illustration (c). The lower nut should be fixed to the rod (e.g., tack-welded; too much heat during the welding process may adversely affect the strength of the rod) so that the rod does not turn out when the top nut is tightened. The tack welds shall be placed at the rod overhang face of the nut; this practice is accepted by the ASME Pressure Vessel Code for nonstructural tack welds used as a locking device even though welding is not otherwise permitted for rod materials, such as A-193-B7.

1.5 Anchor Failure

The two most common causes of anchor failure are corrosion and lack of proper preload. Anchor failures [see Fig. 2, illustration (a)] occur when either the bolt fails mechanically (i.e., steel failure, pull-through, or pullout) or when concrete surrounding the anchor fails (i.e., concrete breakout or concrete splits) due to the tensile and/or shear loading of the anchor [see Fig. 2, illustrations (b) and (c)].

1.6 Postinstalled Mechanical Anchor

This Article's emphasis is on postinstalled mechanical anchors of M6 (0.25 in.) diameter or larger, placed into predrilled holes and anchored within the concrete by mechanical means. While data contained in the various tables is limited to a maximum diameter of M24 (1 in.), the methodology contained in this document applies to larger diameter anchors found in process equipment supports. However, many different postinstalled adhesive anchors that are anchored by chemical means (e.g., epoxy) are available for use in concrete. These anchors

Fig. 2 Anchor and Concrete Failure

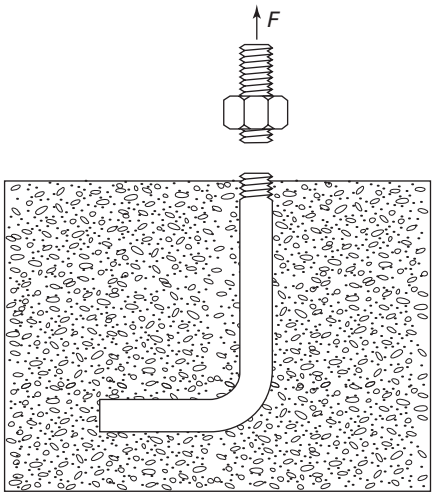

(a) Anchor Failure

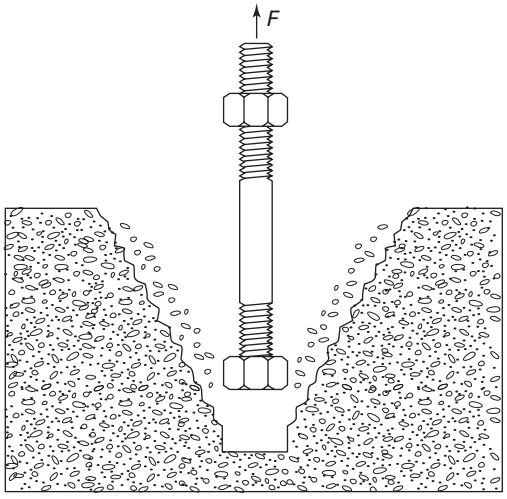

(b) Concrete Failure — Tensile

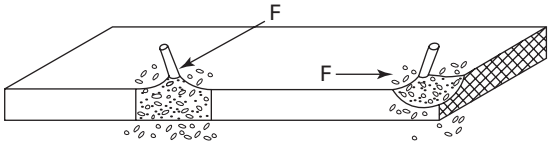

(c) Concrete Failure — Shear

Fig. 3 Column Base Anchors in Concrete

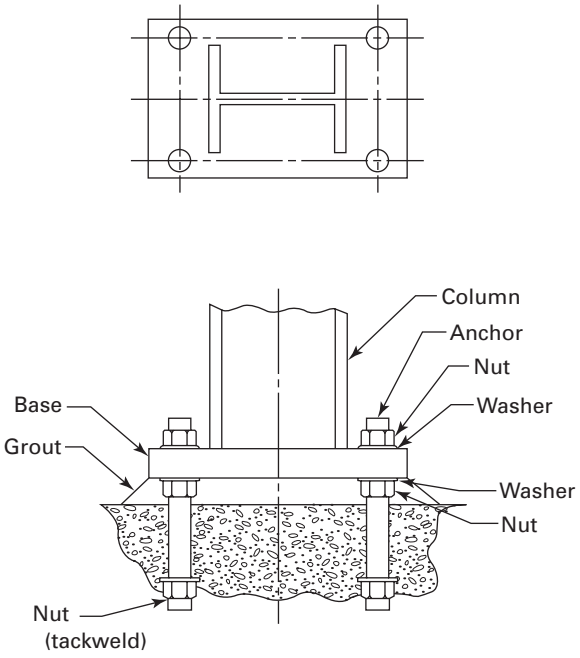

exhibit a range of working principles, proprietary designs, and performance characteristics and thus are not the primary emphasis of this document. These adhesive anchored bolts are acceptable for use as long as they are installed per the manufacturer's recommendations. Because of the increasing popularity of this type of anchor, Mandatory Appendix I contains some installation data for adhesive anchors.

1.7 Column Base Mechanical Anchor

An example of a column base mechanical anchor in concrete is shown in Fig. 3. Note, this is not a postinstalled anchor but an original-installed anchor. However, even though Fig. 3 does not show other types, this Article is also applicable to other process equipment supports, such as vessel skirts, tubular columns, and saddle supports.

2 LIMITATIONS

2.1 Additional Requirements

Part 1 of this Standard contains additional requirements and limitations. This Article shall be used in conjunction with Part 1.

2.2 Considerations

In applying this repair method, consideration shall be given to compatibility of materials, operating conditions, intended life of the component, and any limitations on examination and testing.

3 DESIGN

3.1 Original Anchor Assembly

The design of the original anchor assembly should be in accordance with the original construction code, such as the American Institute of Steel Construction (AISC), *Manual of Steel Construction or the Building Code Requirements for Structural Concrete* (now obsolete) or the American Concrete Institute (ACI) 318-02, *Building Code Requirements for Structural Concrete*.

3.2 Design Considerations

The design items specified in paras. 3.2.1 through 3.2.3 are provided for consideration when making repairs to the original anchor assembly.

3.2.1 Embedment. Anchors of any type shall have an embedment length sufficient to develop the full strength of the anchor. Drilling is often complicated by the presence of reinforcing rods. Should one or more be encountered, an analysis shall be performed to determine if it is permissible to *sacrifice* the reinforcing rods, (i.e., by cutting the reinforcing rods as they are encountered, a reduction in the steel reinforcing area will occur such that the concrete design may be compromised). Anchors, when used with the leveling nut method of setting column bases, shall have a nut and heavy erection washer both above and below the base plate. The washers are used to prevent the nuts from attempting to push through the oversized holes. Extra thread should be supplied for lower nut adjustment.

3.2.2 Loading. Any anchor that has been sized by calculations based on design loadings shall be preloaded sufficiently to prevent either base-plate separation from foundation or movement on the foundation when loads are applied. If preload is less than maximum load in service, anchor bolt fatigue may occur. Periodic tightening is required to compensate for the preload loss due to the relaxation of the concrete. Anchors are the link between foundation and column. When a column base is subject to uplift, the uplift force must be resisted by a weight greater than the uplift force, or the column base must be anchored. Anchors transmit this tension force. Several characteristics in anchor design can be varied to suit the load requirements: the quantity of bolts; the diameter; the length; and type of material.

3.2.3 Shear Forces. Anchors typically are not used to resist shear forces in a column base. While base plate friction resists shear, shear forces can be further resisted by some device attached to the underside of the base plate and inserted into a groove or keyway in the concrete foundation. The main reason anchors are not be used to resist shear forces is that they have a relatively low-bending resistance. If a base plate were to ease sideways into bearing against an anchor, the load (discounting the grout) would be delivered approximately 25 mm (1 in.) above the concrete top. The anchor would act like a vertical cantilevered member. Also, the random location of anchors as they are located in the oversized base plate holes results in a situation where seldom does more than one anchor of a multianchor group go into shear at any one time. ACI 318 makes allowance for shear capacity on concrete anchor bolts. The capacity is reduced in presence of grout to account for bending.

Fig. 4 Weld Repair of Existing Rod

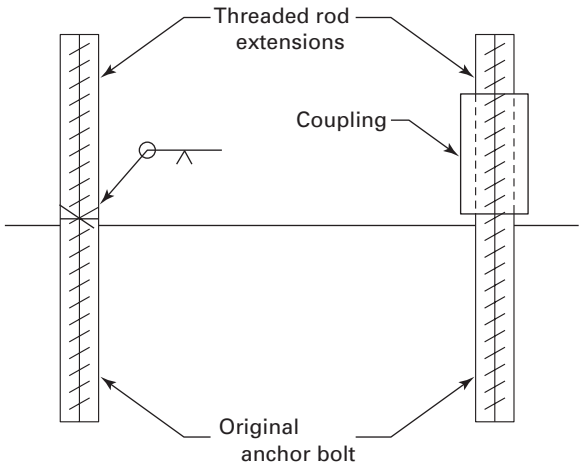

4 FABRICATION

4.1 Weld Repair of Existing Rods

Anchors, fabricated from A36 or A307 that break off at the surface but do not disturb the surrounding concrete may have a threaded rod extension welded to the top of the bolt (see Fig. 4). The weld repair shall include means to avoid damage to the concrete. The material of construction of the rod shall be known. Anchors made of materials with properties achieved by heat treatment (e.g., quench and tempered) shall not be weld repaired. AWS D1.4 is a reference for guidance on welding concrete embedded steel.

4.2 Repair of Existing Rods With Extensions

For anchors fabricated from A36, A307, and A-193-B7, a sleeve coupling may be used with a short threaded rod extension, provided the hole in the base plate is large enough to ensure that it clears the coupling (see Fig. 4).

4.3 Replacement

After removing the nut and washer, a carbide bit cutting tool may be placed over the protruding bolt and a circular opening drilled in the steel base plate, slightly larger than the bolt diameter, exposing the concrete around the damaged bolt. A diamond bit drill may then be used to cut through the concrete at sufficient depth

Table 1 Minimum Edge Distance for Punched, Reamed, or Drilled Holes

Anchor Size, mm (in.)	At Sheared Edges, mm (in.)	At Rolled Edges of Plates or Gas Cut Edges, mm (in.)
M6 (1/4)	13 (1/2)	10 (3/8)
M10 (7/16)	19 (3/4)	19 (3/4)
M12 (1/2)	22 (7/8)	19 (3/4)
M16 (5/8)	29 (1 1/8)	22 (7/8)
M20 (3/4)	32 (1 1/4)	25 (1)
M24 (1)	44 (1 3/4)	31 (1 1/4)

GENERAL NOTE: This data is provided as an illustrative example of typical limits and should not be used as reference data without first validating in accordance with the applicable design code or manufacturers specification.

Table 2 Expansion Anchor — Illustrative Example of Typical Minimum Limits for Reference

Nominal Bolt Diameter, in.	Embedded Length, *Le*, for 4.5*d*, mm (in.)	Embedded Length, *Le*, for 8*d*, mm (in.)	Minimum Spacing, *S*, for Embedment 4.5*d*, mm (in.) [Note (1)]	Minimum Spacing, *S*, for Embedment 8*d*, mm (in.)	Minimum Edge Distance, *ED*, for Embedment 4.5*d*, mm (in.)	Minimum Edge Distance, *ED* for Embedment 8*d*, mm (in.)
M6 (1/4)	29 (1 1/8)	. . .	64 (2 1/2)	. . .	31 (1 1/4)	. . .
M10 (7/16)	41 (1 5/8)	75 (3)	94 (3 3/4)	113 (4 1/2)	47 (1 7/8)	125 (5)
M12 (1/2)	56 (2 1/4)	100 (4)	125 (5)	152.4 (6)	64 (2 1/2)	175 (7)
M16 (5/8)	69 (2 3/4)	125 (5)	156 (6 1/4)	188 (7 1/2)	78 (3 1/8)	213 (8 1/2)
M20 (3/4)	81 (3 1/4)	150 (6)	188 (7 1/2)	225 (9)	94 (3 3/4)	250 (10)
M24 (1)	113 (4 1/2)	200 (8)	250 (10)	300 (12)	125 (5)	325 (13)

GENERAL NOTE: This data is provided as an illustrative example of typical limits and should not be used as reference data without first validating in accordance with the applicable design code or manufacturers specification. It is up to the designer to determine values for diameters greater than M24 (1 in.). This data table should not be extrapolated.

NOTE:

(1) *S* is the center-to-center distance between two adjacent expansion anchors. The two expansion anchors may be on the same or on two different plate assemblies. Minimum spacing between anchors of different diameters shall be the average of the minimum spacing for individual diameters.

to extract the damaged or corroded bolt. The carbide bit drill may also be used to cut through the bent legs of "L" or "J" bolts. Care should be taken to avoid cutting rebar, unless approved by a structural engineering evaluation.

Anchors exert relatively small lateral load on base plates, therefore "tear-out" is typically not a problem. Table 1 contains dimensions based on anchor size.

NOTE: Tables 1 and 2 are provided as illustrative examples.

While drilling of base plate holes is the preferred method for holes of 38 mm (1.5 in.) in diameter or smaller, burning of base plate holes is an acceptable procedure for larger holes, especially when applied to field repair situations. The slight hardening exhibited at the burned edge is not important since the bearing of the anchor against the side of the hole is not a factor; it makes little difference how the hole is made. When sizing the area of a base plate, the loss of area at the anchor holes (and grout holes) is generally ignored.

Two of the most commonly used postinstalled anchors are the *wedge* and the *sleeve* anchors. Paragraphs 4.3.1 and 4.3.2 list installation instructions for each.

4.3.1 Wedge Anchor Installation Instructions. Mechanical wedge anchors require greater concrete strength due to the concentration of stresses at the expansion clip. The anchor works by expansion in the tip, and thus localizes all of the pressure in a small area. This can cause the concrete to crack or, if the concrete is weak, the anchor may not tighten. This anchor can only be used in concrete, not in masonry. The following are wedge anchor installation instructions (see Fig. 5):

(a) Drill the hole perpendicular to the work surface. Do not ream hole or allow the drill to wobble.

Fig. 5 Wedge Anchor

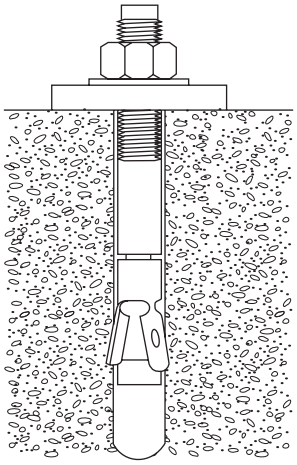

Fig. 6 Sleeve Anchor

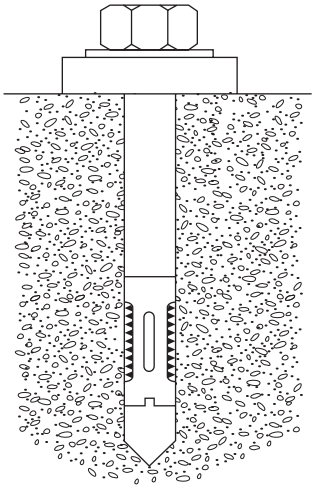

(b) Drill the hole deeper than the intended embedment depth of the anchor, but not closer than two anchor diameters to the bottom surface of the concrete.

(c) Clean the hole using compressed air as this is necessary for proper anchor performance.

(d) Place anchor in hole. May require striking with a hammer, due to friction fit anchor design, to obtain proper anchor depth.

(e) Place washer and nut on anchor and tighten to torque values listed in manufacturers specification.

4.3.2 Sleeve Anchor Installation Instructions

NOTE: A sleeve anchor with a wrapped sheet metal sleeve, as shown in Fig. 6, is a light-duty anchor and should not be used for base plate applications. There are heavy-duty sleeve anchors that work as expansion anchors but they are not shown here. The illustration is for installation information only.

The following are sleeve anchor installation instructions:

(a) Drill the hole perpendicular to the work surface. Do not ream hole or allow the drill to wobble.

(b) Drill the hole deeper than the intended embedment depth of the anchor, but not closer than two anchor diameters to the bottom surface of the concrete.

(c) Clean the hole using compressed air as this is necessary for proper anchor performance.

(d) Place the washer and nut on the anchor and place the anchor into the hole so that the nut rests solidly against the support base plate. Tapping with a hammer may be required to achieve this result.

(e) Tighten the nut to three to five turns past the hand-tight position.

4.4 Abandon in Place

Damaged or corroded bolt may be left in place and one or several new anchor holes may be drilled into the base plate and concrete. New anchors may be installed in the newly prepared holes according to the anchor vendor's installation procedure and new washers and nuts may be placed and tightened to complete the repair. When new anchors are placed close to the existing anchors, the nut may be removed from the abandoned anchor, thus removing the tensile load from that anchor or the abandoned anchor may be cut off so as not to interfere with the equipment base plate.

4.5 Tolerance on Expansion Anchor Location

NOTE: These may also be applied to adhesive anchor locations.

4.5.1 Tolerances for Expansion Anchor With 4.5*d* Embedment. The location of an individual anchor may be changed to facilitate installation, provided the tolerances specified in paras. 4.5.1.1 through 4.5.1.3 are met.

4.5.1.1 Relocation of one or two anchors within an arc as shown in Figs. 7 and 8 shall be permissible if the following requirements are met:

(a) the minimum edge distance between the anchor and the plate edge meets the requirements of Table 1

(b) requirements of edge distance, *ED*, and embedded length, *Le*, per Table 2. These tolerances apply in a situation where instead of drilling a hole in the designated location, a hole in the alternate location is drilled.

4.5.1.2 Expansion anchors not using the tolerance of para. 4.5.1.1 may be relocated such that the spacing is within 3 mm ($\frac{1}{8}$ in.) of the specified spacing for M6 ($\frac{1}{4}$ in.) and M10 ($\frac{7}{16}$ in.) diameter expansion anchor and within 6 mm ($\frac{1}{4}$ in.) of the specified spacing for M12 ($\frac{1}{2}$ in.) and larger diameter expansion anchors. The requirements of Tables 1 and 2 shall apply.

4.5.1.3 Expansion anchors not meeting the tolerances of paras. 4.5.1.1 and 4.5.1.2 shall be subject to an engineering assessment by a structural engineer for resolution on a case-by-case basis.

Fig. 7 Relocation of One or Two Anchors Within an Arc ($r = \frac{1}{2}d$)

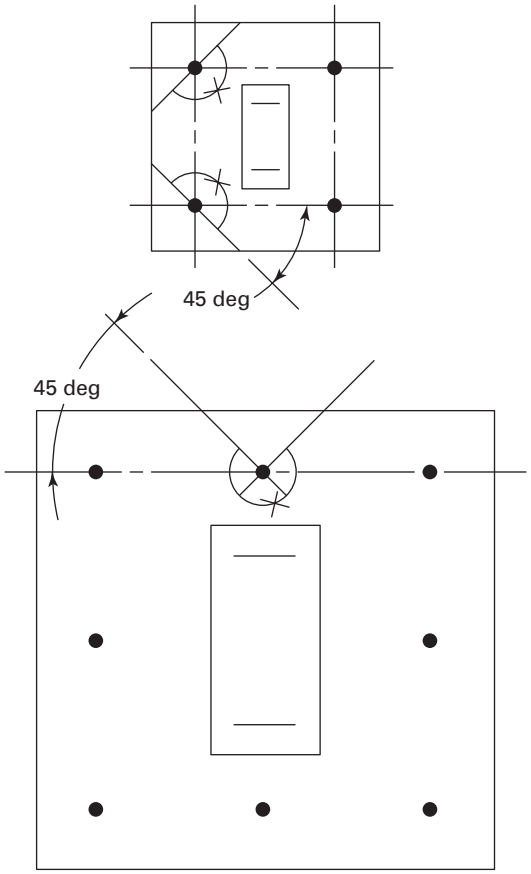

GENERAL NOTES:
(a) Arc radius $r = \frac{1}{2}d$
(b) X = relocated anchor

Fig. 8 Relocation of One or Two Anchors Within an Arc ($r = d$)

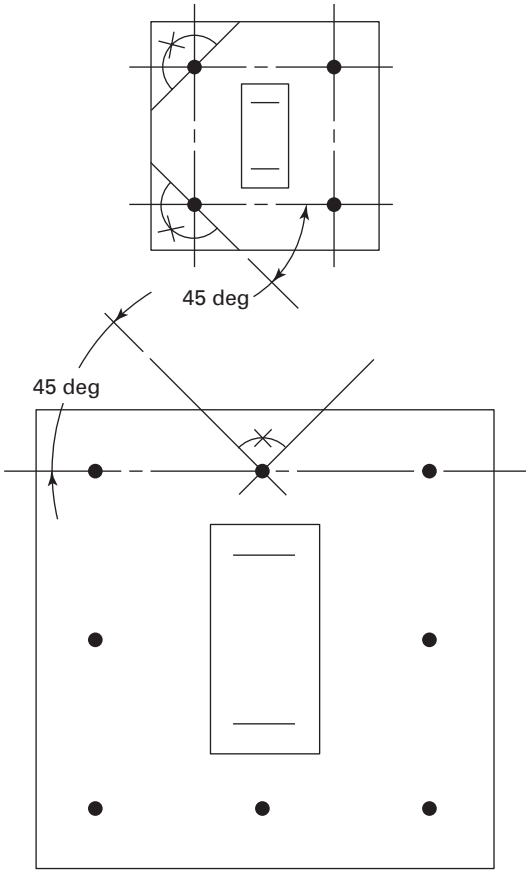

GENERAL NOTES:
(a) Arc radius $r = d$
(b) X = relocated anchor

Fig. 9 Relocation of One or Two Anchors Within a Design Plate Assembly

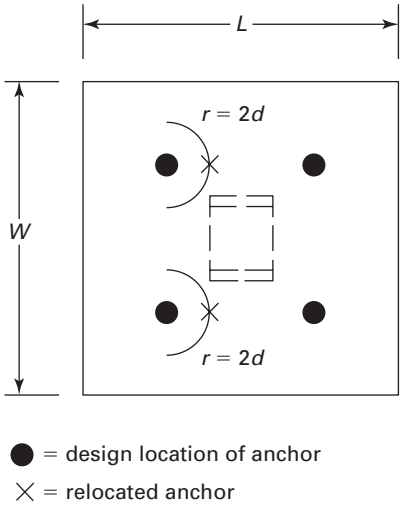

Fig. 10 Relocation of More Than Two Anchors Within a Design Plate Assembly

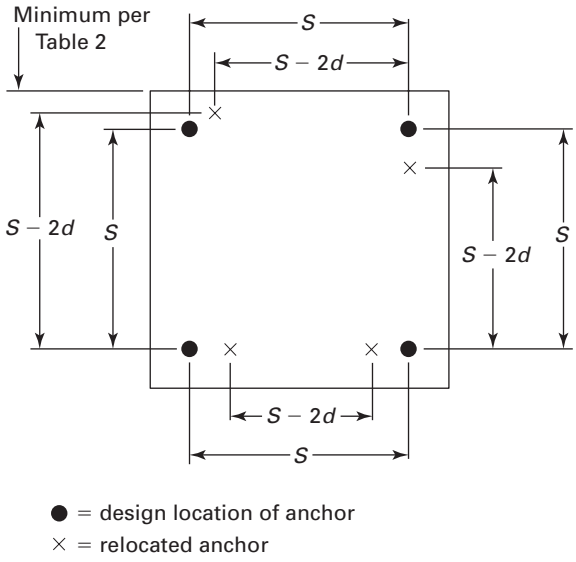

4.6 Tolerance for Anchors With 8*d* Embedment

The location of an individual anchor may be changed to facilitate installation, provided the tolerances specified in paras. 4.6.1 and 4.6.2 are met.

4.6.1 Relocation of One or Two Anchors Within the Design Plate Assembly (Fig. 9). The relocation of anchors within a circle of *2d* radius shall be permissible, if the requirements of paras. 4.6.1.1 through 4.6.1.4 are met.

4.6.1.1 The minimum edge distance between the anchor and the plate edge meets the requirements as shown in Table 1.

4.6.1.2 Requirements of *ED* and *Le* per Table 2.

4.6.1.3 If the angularity of the relocated anchor is less than or equal to 4 deg, use of the same size anchor is allowed.

4.6.1.4 If the angularity of the relocated anchor is greater than 4 deg and less than 10 deg, the next larger size shall be used for the relocated anchor for example, use M16 ($\frac{5}{8}$ in.) diameter anchor in place of M12 ($\frac{1}{2}$ in.) diameter, M24 (1 in.) diameter in place of M20 ($\frac{3}{4}$ in.) diameter. For existing M24 (1 in.) diameter anchor, the relocated anchor shall be of the same diameter if the angularity limitation of < 4 deg is satisfied. Bolt angularity is the angle off the 90 deg perpendicular between the base plate and the anchor.

4.6.2 Relocation of More Than Two Anchors Within Design Plate Assembly (Fig. 10). Any number of anchors in a plate assembly may be relocated as long as the installed anchor spacing is within plus or minus two bolt diameters of the designated spacing and the requirements given in para. 4.6.1 are met. For other cases, engineering shall be notified for resolution.

4.6.3 Relocation of Anchors Outside the Design Plate Assemblies (Fig. 11)

4.6.3.1 If one bolt must be relocated because of interference, the entire row of bolts shall be relocated likewise. The maximum permissible relocation shall be 75 mm (3 in.).

4.6.3.2 Requirements of *ED* and *Le* per Table 2 and minimum edge distance requirements per Table 1 shall be met.

4.6.3.3 A new rectangular plate, $W \times L'$ or $W' \times L$ with a thickness of 6 mm ($\frac{1}{4}$ in.) more than the existing assembly plate shall be used.

4.6.3.4 Attachments shall be made with respect to the new plate assembly centerline.

4.6.3.5 Anchors within the *new* plate may be adjusted in accordance with the provisions in para. 4.5.

4.6.3.6 If more than one row of bolts has to be relocated, an engineering assessment shall be performed.

5 EXAMINATION

The threaded rod extension welded per para. 4.1 shall be examined using the magnetic particle method per ASME Boiler and Pressure Vessel Code, Section V. Acceptance/rejection criteria for MT are the applicable code of construction or the post-construction code. All other repairs shall be examined per original installation

Fig. 11 Using an Enlarged Plate

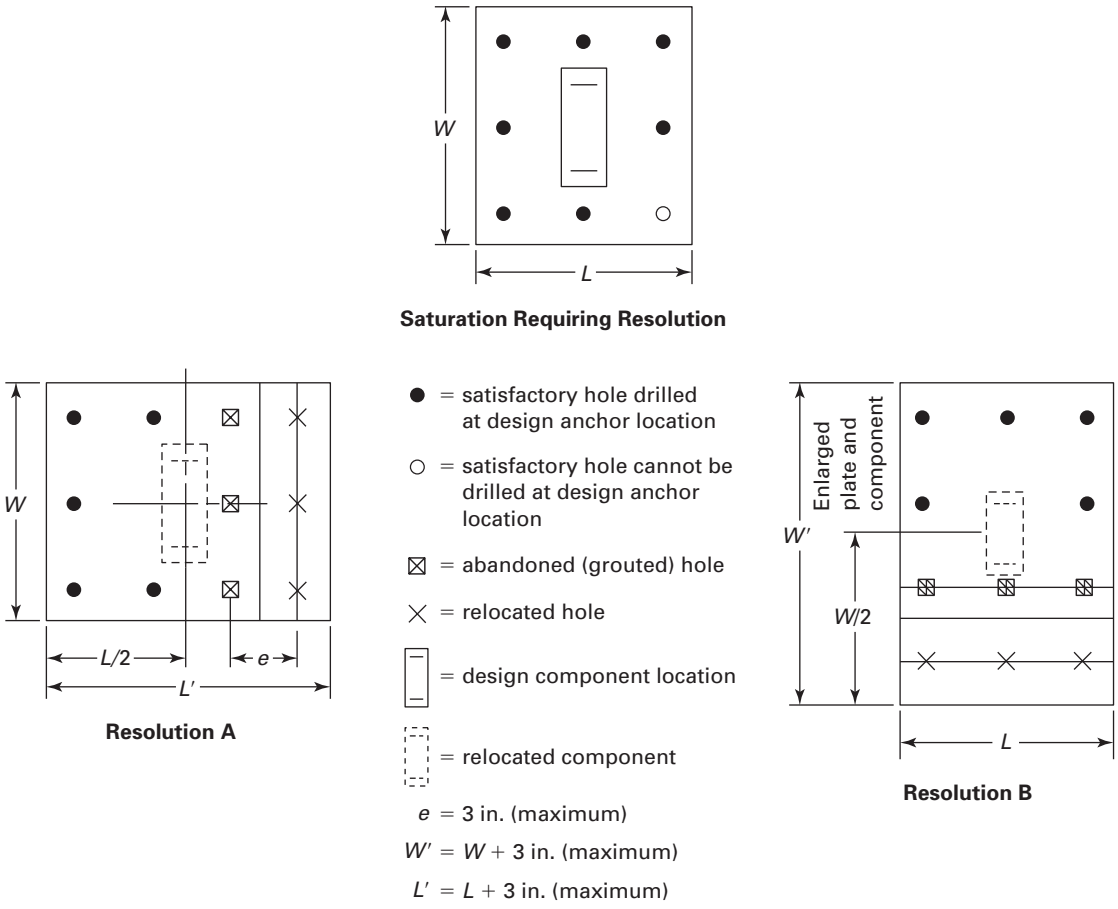

requirements and follow the acceptance criteria per the original installation requirements.

6 TESTING

Testing shall be per original installation requirements. In the event it is determined that testing of the actual repaired anchor is not feasible, it is acceptable to represent the installation/repair method in a prototype if the anchor sample(s) are prepared in the same manner.

7 REFERENCES

ACI 318-02, Building Code Requirements for Structural Concrete

Publisher: American Concrete Institute (ACI), 38800 Country Club Drive, Farmington Hills, MI 48331

ASME Boiler and Pressure Vessel Code, Section V, Nondestructive Examination

Publisher: The American Society of Mechanical Engineers (ASME), Three Park Avenue, New York, NY 10016-5990; Order Department: 22 Law Drive, P.O. Box 2300, Fairfield, NJ 07007-2300

D1.4, Structural Welding Code-Reinforcing Steel

Publisher: American Welding Society (AWS), 550 NW Le Jeune Road, Miami, FL 33126

Manual of Steel Construction

Publisher: American Institute of Steel Construction, Inc. (AISC), One East Wacker Drive, Chicago, IL 60601-1802

Article 3.8, Mandatory Appendix I
Anchors Installation Using Chemical Means (Adhesive)

I-1 Adhesive Anchors

Adhesive anchors have the advantage of working in lower strength concrete; however, they are more expensive to install than mechanical anchors. The adhesive anchor works by drilling a hole in the concrete, filling it with adhesive, and then inserting the anchor. The shear force is spread equally along the length of the rod. The following are Drop-In Adhesive Anchor Installation Instructions:

(a) Select the proper size drill bit. Drill the hole perpendicular to the work surface. Do not ream the hole or allow the drill to wobble.

(b) Clean hole of any dust and debris as any left will reduce the holding capacity of the anchor.

(c) Inject the adhesive into the hole approximately half full.

(d) Insert anchor into the hole with a slight twisting motion.

(e) Allow the adhesive to cure per the manufacture's specification. Do not touch the anchor during this cure time.

(f) After the cure time has elapsed, it is safe to load the anchor by placing a washer and nut on the anchor and tighten to torque values listed in the manufacturer's specification.

Article 3.9
Valves With Pressure-Seal-Type Bonnets

(In the course of preparation.)

Article 3.10
Hot Bolting

(In the course of preparation.)

Article 3.11
Hot and Half Bolting Removal Procedures

(08)

1 DESCRIPTION

1.1 Introduction

Bolts in flanged joints which have been in service can be difficult to remove. Such difficulties at the start of shutdowns for plant maintenance can result in costly schedule interruptions, or extend the duration of activities involving some hazard. The use of hot and half bolting removal procedures may be considered as a possible solution.

1.2 Hot Bolting

Hot bolting is the sequential removal and replacement of bolts on flanged joints while under reduced operating pressure (see para. 3.4). It is carried out one bolt at a time in a predetermined cross pattern sequence. Each replaced bolt is fully tensioned before the next one is removed.

Hot bolting can be used to clean, lubricate, and reinstall existing bolts for pre-shutdown activities, replace corroded or damaged bolts, or upgrade the material specification or grade of bolts.

NOTE: Hot bolting can also be used to check residual bolt stress after a period of operation, or to retighten loose bolts. Hot bolting for these purposes is beyond the scope of this Standard.

1.3 Half Bolting

Half bolting is the removal of every other bolt (so the flange is left with half the number of bolts) during plant depressurization, usually when the system is close to atmospheric pressure.

NOTE: Half bolting is also sometimes referred to as skip bolting or odd bolting.

1.4 Definition of Bolt

Bolt as used herein is an all-inclusive term for any type of threaded fastener that can be used in a pressure-boundary bolted flange joint assembly such as a bolt, stud, studbolt, cap screw, etc.

2 LIMITATIONS

2.1 Additional Requirements

Part 1 of this Standard, Scope, Organization, and Intent, contains additional requirements and limitations. This Article shall be used in conjunction with Part 1.

2.2 Risks Associated With Hot and Half Bolting

Although hot bolting and half bolting removal procedures can reduce plant downtime, they are potentially hazardous and therefore caution shall be exercised in their planning and execution. In considering potential applications for hot bolting and half bolting removal procedures, any potential benefits from these activities should be carefully weighed against the risks (see para. 3.1).

2.2.1 Risks Associated With Hot Bolting. When conducting hot bolting removal procedures, the risks of fluid leakage are increased due to increased bolting stresses and relaxation of gasket compression, both potentially resulting in joint leakage or gasket segment blowout.

2.2.2 Risks Associated With Half Bolting. When conducting half bolting removal procedures, the risks of fluid leakage are increased due to reduced gasket compression and the possibility that the system may inadvertently be re-pressurized. For this reason, the system pressure at which half bolting is conducted should be well below design pressure and preferably at or near atmospheric pressure with local management controls in place to prevent re-pressurization.

2.3 Procedures and Safe Work Practices

The requirements and guidance for hot bolting and half bolting removal provided in this Article are generic in nature and shall be combined with a job-specific procedure along with other appropriate plant safe work practices.

3 DESIGN

3.1 Engineering and Risk Analysis

An engineering and risk analysis of the proposed hot bolting or half bolting removal operation shall be carried out to establish that the operation can be performed safely; e.g., establish that no unacceptably high external loads and/or bending moments are acting on the joint that could cause leakage or gasket blowout during the operation. The analysis should consider, as a minimum, the following:

(a) contents of the piping or equipment
(b) design and operating pressures and temperatures
(c) possible upset conditions
(d) bending moment on joint (see para. 3.2.1)

(e) position and functionality of piping supports
(f) position and type of expansion bellows
(g) maintenance history of the joint
(h) experience with hot or half bolting procedure application to similar joints
(i) the target torque used in joint assembly
(j) confined vs. unconfined gasket type

NOTE: A spiral wound gasket with a centering ring is considered to be a confined gasket.

(k) through bolted vs. bolts studded unto tapped holes (see para. 3.6)
(l) gasket material/thickness
(m) condition of flange
(n) condition of bolts; including consideration whether the necessary bolt stress is sufficient, or overstressed (see paras. 4.1.6 and 4.1.7)
(o) condition of nuts (see paras. 4.1.6 and 4.1.7)

3.2 Minimum Number of Flange Bolts

Unless the results of the engineering and risk analysis establish that the consequences of either joint leakage or gasket blowout are acceptable, flanges should have a minimum of eight bolts.

3.2.1 Bending Moments on ASME B16.5 Class 150 Flanges. The 8-bolt Class 150 B16.5 flange is recognized as being uniquely under-bolted and thereby can only accommodate modest external bending moments, a consideration in the risk analysis.

3.3 Determining Maximum Pressures When Conducting Hot/Half Bolting

The maximum pressure allowed while conducting either operation shall take due consideration of

(a) the applicable pressure-coincident temperature rating, for standard flanges (such as ASME 16.5 or B16.47)
(b) the calculated maximum allowable pressure per the applicable code of construction, for nonstandard flanges
(c) the presence of external loads and/or bending moments on the flange and the role they play on the flange pressure carrying capability

NOTE: It is recommended that the external axial loads and external bending moments acting across the flange be conservatively converted into equivalent pressure. This total equivalent pressure plus the design pressure of the system under consideration becomes the pressure to be used in the risk analysis.

(d) the reduction of effective minimum gasket compressive stress between bolts associated with bolt removal; e.g., that sufficient loading remains on the gasket to ensure that it maintains a seal

3.4 Maximum Pressure/Hot Bolting

Unless otherwise justified by an engineering and risk analysis, hot bolting may be performed only when the operating pressure is equal to or less than 50% of maximum pressure allowed as determined in para. 3.3.

3.4.1 Confirming Reduced Pressure Prior to Hot Bolting. Confirmation that the pressure has been reduced and that re-pressurization is not practicable shall be obtained from operations personnel before the hot bolting removal operation is started.

NOTE: In paras. 3.4.1 and 3.5.1, "not practicable" means that sufficient controls are in place to ensure re-pressurization will not occur until the system is returned to a status when it is safe to do so.

3.5 Maximum Pressure/Half Bolting

Unless otherwise justified by an engineering and risk analysis, half bolting may be performed only during depressurization when the pressure is equal to or less than 25% of the maximum allowable pressure or 50 psig, whichever is lower, and when low pressure steam, air, or nitrogen (also see para. 4.1.5) is the purging media.

NOTE: If the fluid contents are such that there is low risk of injury associated with accidental contact, the need for purging may be reviewed for deletion.

3.5.1 Confirming Reduced Pressure Prior to Half Bolting. Confirmation that the pressure has been reduced and that repressurization is not practicable shall be obtained from operations personnel before the half bolting removal operation is started.

3.6 Tapped Holes — Use of Hot Bolting

If bolts stud into tapped holes, the use of the hot bolting procedure is not recommended unless it is known that the threads on the studded end of the bolt have been relieved to eliminate the possibility of damaging the tapped threads when the bolt is backed out.

Even if this thread relief has been provided, it should be recognized that studded joints are inherently more sensitive to reduction in bolt prestress due to normal embedment and gasket creep effects. Accordingly, the probability of a leak/gasket blowout is greater during either a hot or half bolting operation than for a counterpart through-bolted joint.

4 FABRICATION

4.1 Preparation

4.1.1 Personnel Protective Equipment/Emergency Planning. Appropriate protective and safety equipment shall be worn in case of leakage. The need for emergency standby and contingency planning shall also be considered.

4.1.2 Access Considerations. Consideration shall be given to the accessibility of the area and that adequate escape routes are available should uncontrolled flange leakage occur.

4.1.3 Location and Condition of Isolation Valves. The location and condition of the nearest upstream and

downstream isolation valves shall be ascertained prior to commencing work. Operations personnel shall have a contingency plan for the isolation of the joint, which addresses the need to block in or depressurize the equipment rapidly should an uncontrollable leak occur.

4.1.4 Identification of Emergency Facilities. As necessary, emergency facilities such as safety showers and eye baths should be identified and locations made known to personnel involved in the work.

4.1.5 Consideration of Nitrogen Hazards. If nitrogen is used as a purging medium, consideration shall be given to protection of personnel should a leak occur in a confined space.

4.1.6 Inspection of the Flange Assembly. A thorough inspection of the flange assembly should be conducted to verify the integrity of the flange and its bolting, with consideration given to the following:

(a) deterioration of the bolts and nuts, such as necking (corrosion thinning), worn threads, or cracking

(b) the ability of the gasket to be retightened and its blowout potential

(c) deterioration of the gasket, and the potential of gasket failure due to disturbance or retightening

(d) verification of sufficient thread engagement before half bolting of studded flanges, e.g., by ultrasonic measurement of stud length

4.1.7 Assessment of Existing Bolt Load Capability. If deterioration of bolts and nuts [see para. 4.1.6(a)] is found, consideration shall be given to the safety aspects of bolt removal and the increased load on the remaining bolts. An analysis of the minimum required bolt load for leak tightness and an assessment of the possible bolt stress may be required to ensure the bolts have sufficient load carrying capability.

4.2 Execution

4.2.1 Check of Existing Bolts for Tightness. To anticipate flange bolt relaxation, every bolt shall be checked for tightness prior to removing the first bolt. Bolt tightness may be checked by applying torque with either a hand wrench or a hydraulic torque wrench. Do not use hammer (slug) wrenches.

4.2.2 Sequence of Bolt Changeout. When hot bolting, the bolts shall be changed out one at a time in a proper tightening sequence (see Table 4 of ASME PCC-1). The numbering system for the appropriate tightening sequence should be marked on the flange in a readily visible location before starting to remove any bolts.

4.2.3 Considerations Relative to In-service vs. Preshutdown. The provisions of paras. 4.2.4 through 4.2.7 may be more applicable when the flange is intended to remain in service, as opposed to immediately prior to shutdown. This should be considered in the engineering and risk analysis (see para. 3.1).

4.2.4 Cleaning and Lubrication of Surfaces. As bolts and nuts are removed, the surface of the flanges where contact is made with the nuts should be wire or power brushed clean (remove protrusions, spot face if required). Proper lubrication with an approved lubricant should be applied to the friction surfaces of the bolt assembly. This includes the threads and all bearing surfaces of the nuts except for the surface between the nut and the flange at the rear of the joint (on the opposite side of the flange from the torque wrench), where it is beneficial to allow friction to develop between the bearing surfaces.

4.2.5 Hand Tightening and Baseline Bolt Length Readings. Install bolts and nuts hand tight, with the marked ends of the bolts and nuts located on the same side of the joint and facing outward to facilitate inspection. If ultrasonic elongation control is to be used, initial bolt length readings should be taken and recorded at this time.

4.2.6 First Pass Torquing. Before new bolts/nuts are installed, check to determine that the nuts run freely by hand past where they will come to rest after tightening. If nuts will not turn freely by hand, check for cause and make necessary corrections/replacements.

As each new bolt is installed, tighten the bolt using the target torque value. Continue this process for each bolt in the appropriate sequential pattern. If ultrasonic elongation control is to be used, readings should be taken after the first eight bolts have been replaced, and the torque values adjusted, if necessary. If the adjusted torque value is substantially higher than that used for the first eight bolts, these bolts should be retorqued using the new torque value.

NOTE: Differential thermal expansion may cause a loss of bolt load during the cooldown of hot flanges (see para. 12 of ASME PCC-1). This should be considered in determining the hot reassembly bolt load. In addition, consideration should be given to allowing replacement bolts to reach their operating temperature prior to final tightening.

4.2.7 Final Torquing. After each tightening round, take measurements around the circumference of the gap between flanges with a vernier or caliper to verify that the flanges are being brought together evenly (see para. 11.1 of ASME PCC-1).

After the first pass torquing all bolts to the target torque value in an appropriate sequential order, one of the following actions shall be required, depending upon whether or not ultrasonic elongation control is used:

(a) Tighten all bolts again using the same torque value and following the sequential order from the first pass, followed by one or more passes using the target torque value in a rotational order.

(b) Take ultrasonic readings and adjust the torque value, if necessary. Then, if the torque value is changed as a result of the ultrasonic elongation measurements, retorque twice at the final torque value in the appropriate sequential order, followed by at least one pass in a rotational order, until the nuts will not turn at the target torque. If it is not necessary to change the target torque value, follow step (a) above.

4.2.8 Cutting of Bolts. Cold cutting of seized bolts and use of nut splitters is acceptable. Thermal cutting methods should not be performed unless the engineering and risk analysis (see para. 3.1) determines that it can be done safely. Of particular concern are lines containing contents that can generate a fire or release toxic materials.

5 EXAMINATION

5.1 Examination for Workmanship and Leakage

Within the context of these requirements, examination consists of an in-process visual check for good workmanship and an in-service visual check for signs of leakage.

5.2 Examination of Bolts for Proper Material Specification

The markings on the bolts should be visually checked to verify that the correct material is being used. This may be supplemented with PMI if additional assurance of correct material is desired.

6 TESTING

There are no testing requirements associated with this Article.

7 REFERENCES

ASME B16.5, Pipe Flanges and Flanged Fittings, NPS 1-$\frac{1}{2}$ Through NPS 24

ASME B16.47, Large Diameter Steel Flanges, NPS 26 Through NPS 60

ASME PCC-1, Guidelines for Pressure Boundary Bolted Flange Joint Assembly

Publisher: The American Society of Mechanical Engineers (ASME), Three Park Avenue, New York, NY 10016-5990; Order Department: 22 Law Drive, P.O. Box 2300, Fairfield, NJ 07007-2300

Article 3.12
Inspection and Repair of Shell and Tube Heat Exchangers

(08)

1 DESCRIPTION

This Article provides general good recommendations and requirements for the following repair techniques:

(a) determining the type of inspection technique to use for the inspection of the tubes and tube bundle of a shell and tube heat exchanger

(b) determining the type of inspection technique to use for the inspection of the tubesheet and the tube-to-tubesheet assembly of a shell and tube heat exchanger

(c) determining the type of inspection to use for the other pressure containing components of a shell and tube heat exchanger

(d) providing repair techniques for common mechanical failures of various components in a heat exchanger

2 LIMITATIONS

2.1 General

Part 1 of this Standard, Scope, Organization, and Intent, contains additional requirements and limitations. This Article shall be used in conjunction with Part 1.

2.2 Exclusions

(a) This Article shall not be applied to heat exchangers constructed in accordance with ASME BPVC Section VIII, Division 3.

(b) Heat exchangers other than shell and tube design are not included in the scope of this Article.

3 DESIGN

This section provides guidelines for consideration when determining repairs to components of heat exchangers. It may be necessary for the user to have completed an inspection of the components, consider previous damage experienced, or consider lessons learned in the operation of similar equipment prior to beginning design work.

3.1 Existing Conditions

Existing conditions are as follows:

(a) the original design conditions and calculations

(b) ensuring that the design conditions, with an appropriate margin, correspond to the actual normal operating modes including startup, shutdown, and upset conditions

(c) current operating parameters, i.e., pressures, temperatures, changes from normal to peaking service

(d) determination if a pressure and/or temperature rerate is required.

(e) determination if there is a need for conducting failure analysis to reduce the potential for future damage. Reference also API 579/ASME FFS-1.

3.2 General

(a) Materials used for replacement components shall be of the same material type as the original component unless an engineering analysis is performed indicating the need to change the material due to the damage mechanism(s). This analysis shall account for new mechanisms introduced due to potential material interactions. When selecting the material to use, this analysis shall also consider the need to match strength, toughness, and P-number, and to meet the current toughness requirements of the applicable code of construction.

(b) Replacement components shall be of equal or greater thickness unless an engineering analysis is performed indicating the need for a thickness less than the original component thickness.

(c) When considering the repair method for tubes and tube bundles, the user shall consider the impact on the efficiency and other operational characteristics of the heat exchanger due to the potential reduction of heat transfer area. Consultation with a heat transfer specialist may be necessary.

(d) The following additional factors should be considered:

(1) Determination of acceptable wall loss will depend on a number of factors that include

(a) duration of current service run

(b) time to the next planned outage

(c) the criticality of the exchanger operation

(d) damage mechanisms that the tubes are exposed to including the rate of corrosion

(e) historical rate of failure and whether that rate has been increasing

(f) potential for metallurgical upgrade

(g) the potential consequence due to tube failure

(h) equipment accessibility

(i) the scope of the inspection work

(j) the accuracy and effectiveness of the inspection method

(2) For heat exchangers deemed critical to the operation and/or process safey of the facility, the following should also be considered:

(a) total replacement of the tube bundle when tubes inspected indicate a wall loss of 40% or more of the initial, nominal thickness

(b) tube bundle replacement or individual tube replacement when tubes inspected indicate a wall loss of 20% to 40% of the initial, nominal thickness

3.3 Tubes and Tube Bundles

(a) Tubes and tube bundles should be assessed using the data obtained by inspection performed in accordance with Mandatory Appendix I for the types of repairs to perform; plugging by welded, mechanical, or friction fit plugs, partial replacement of the tube bundle, or full replacement of the tube bundle.

(b) When considering the use of mechanical or friction fit plugs, the user should consider the impact on the efficiency and other operational characteristics of the heat exchanger due to the reduction of heat transfer area, especially for heat exchangers that are deemed as critical to the operation and/or process safety of the facility. Consultation with a heat transfer specialist may be necessary.

(c) The tube bundle supports should be assessed using the data obtained by inspection performed in accordance with Mandatory Appendix I. If data indicates that failure of tubes is due to damaged support plates, consideration should be given to replacing with alternative designs. Specific items to consider include

(1) the corrosion allowance provided for the support plate should be twice the value for the shell side due to the potential for the plates to corrode at the regions where the tubes penetrate the supports and lead to tube virbration induced issues. If zero, consideration should be given to assigning a nominal value of 3 mm ($\frac{1}{8}$ in.).

(2) consideration should be given to use of alloy support plates/baffles instead of thicker carbon steel; however, harder material may result in more damage to the tubes rather than the support plates/baffles. Also, the effects of differential thermal expansion should be considered. Consultation with a materials/corrosions specialist may also be necessary.

(3) the spacing between the support plates should be evaluated and adjusted if analysis indicates potential vibration of tubes resulting in damaged tubes and/or support plates. Evaluation per TEMA RCB Section 5 and Section 6 should be considered. Consultation with a heat transfer specialist may also be necessary.

(d) If impingement protection is required to prevent flow-induced erosion, refer to applicable standards such as API Standard 660, TEMA, and HEI for design requirements.

3.4 Tubesheet

(a) Material used to replace a tubesheet shall be of the same or greater allowable stress as used for the original component.

(b) If an engineering analysis indicates tube replacement of a larger diameter is required, additional analysis on the tubesheet shall be performed to determine if the ligament efficiency is acceptable. The analysis shall meet the original code of construction, or if this is not known, the analysis shall meet the requirements of ASME BPVC Section VIII, Division 1.

(c) Tubesheets should be assessed using the data obtained by inspection performed by a method listed in Mandatory Appendix II for determination of repair or replacement of the tubesheet. Common conditions for consideration include

(1) cracking (not through the total thickness) of tubesheet on shell side; more typical in vertical units. Installation of a tubesheet vent and drain should be considered to promote liquid full operation. The vent should be a 19 mm ($\frac{3}{4}$ in.) nozzle welded to the edge of the tubesheet, with a 16 mm ($\frac{5}{8}$ in.) hole in the tubesheet that is parallel to the tubes to the midsection of the tubesheet, then normal to the tubes to the edge of the tubesheet. A gate or ball valve should be installed on the nozzle along with a blind flange or plug.

(2) separation of weld overlay cladding resulting from wire drawing of high-pressure tubeside fluid leaking through tube-to-tubesheet joints.

(3) cracking in the ligament of the tubesheet. A failure analysis should be performed to determine the damage mechanism. The decision to repair versus replace the tubesheet should be based on the damage mechanism along with the extent of the ligament cracking.

(4) corrosion of the tubesheet can occur on the backside (shell side) of the tubesheet. When the corrosion allowance on the backside has been consumed, the tubesheet should either be replaced or an engineering evaluation performed to determine its fitness for service.

(5) corrosion of the tubesheet can occur on the front face (tube side) of the tubesheet. When the corrosion allowance on the face has been consumed, the tubesheet should either be replaced or an engineering evaluation performed to determine its fitness for service. Alternatively, the face of the tubesheet may be repaired by weld buildup that is conditioned by grinding or other mechanical means such that it is returned to the original thickness of the tubesheet. Factors to consider when pursuing this option include

(a) minimum distance between the front face of the tubesheet and the groove for tube-to-tubesheet joints

(b) the need for welding, strength or seal, of the tube-to-tubesheet joint and the need for set back from the front face

3.5 Tube-to-Tubesheet Joints

Tube-to-tubesheet joints should be assessed using the data obtained by inspection performed by one of the methods listed in para. 5.3 for determination of repair type. Repair types for leaking joints include

(a) replacement of a damaged tube, see para. 4.4

(b) plugging a tube, see para. 4.2

(c) removing the tube and performing weld buildup of the tube hole and then remachining the tube hole to the original tube hole diameter. Design of the mechanical joint should be made to the original code of construction, an applicable post-construction code, or to ASME BPVC Section VIII, Division 1, Appendix A. Caution must be exercised to avoid damage to adjacent tubes.

(d) seal welding or strength welding of the joint. Design of the welded joint, if previously welded, should be made to the original code of construction, an applicable post-construction code, or to ASME BPVC Section VIII, Division 1, Appendix A. Consideration should be given to the cleanliness of the joint considering potential residue from the fluids.

(e) consideration shall also be given to the effect of style of heat exchanger on loading of the tube-to-tubesheet joint. For example, a fixed tube exchanger may have higher loadings due to differential thermal expansion than a U-tube exchanger.

3.6 Shell, Channel, or Other Pressure-Retaining Components

(a) Materials used to replace or repair pressure-retaining portions of a shell or channel shall be of the same allowable stress as the original component, unless additional analysis is performed to justify changing the material.

(b) Replacement of these or other pressure-retaining components shall comply with the applicable code of construction. For additional guidance on replacement, see Article 3.1.

(c) Nonpressure-retaining portions of components shall meet the original construction or applicable post-construction code.

(d) Additional guidance on pass-partition plates may be found in API Standard 660.

4 FABRICATION

4.1 General Considerations

(a) When multiple heat exchangers are in use in a parallel configuration, consideration should be given to the flow requirements for each exchanger. Experience has shown that a single heat exchanger removed from service can result in higher flows to the other heat exchanger(s) that may cause damage from erosion, tube bundle vibrations, or other mechanical damage.

(b) Prior to repairs and to increase accuracy of inspection, the tubes should be evaluated for the need to be cleaned. Cleaning may be performed by high pressure water blasting, chemical solutions, or abrasive blasting/scrubbing. Selection of a cleaning methodology shall give consideration to the nature of fouling, tube material type, and tube enhancements.

(1) High pressure water blasting is normally performed at 70 MPa (10,000 psi). In some cases, ultra-high pressure water blasting may be necessary at pressures up to 275 MPa (40,000 psi). Other factors essential to removal of deposits include water flow rate and the spray tip configuration.

(2) When cleaning with chemical solutions, a materials engineer should be consulted to ensure no detrimental effects occur to the tubes and/or shell of the heat exchanger. For example, a caustic solution should not be used in 300 series stainless steel tubes.

(3) When performing abrasive blasting/scrubbing, care shall be exercised to ensure no adverse damage to the tubes occurs. Deterioration of heat transfer capability shall be considered when cleaning tubes with internal components designed to enhance heat transfer by increasing turbulence through the tubes.

(c) Inspection of the tubes periodically during the cleaning process should be made to ensure consistent results. Use of a boroscope may improve inspection results.

(d) When a tube bundle must be removed from its shell for purposes of inspection or repair, caution should be exercised to avoid damage to the tubes or other components.

(e) When it is known that a tube or multiple tubes are leaking, consideration shall be given to pulling a tube for failure analysis to aid in determination of the damage mechanism.

(f) All welded repairs shall be made using qualified welding procedures. Welders, and welding operators shall be qualified in accordance with the requirements of the applicable code of construction or the applicable post-construction code. Welding procedure qualifications shall include impact tests if required by the applicable code of construction for the component being repaired.

(g) Welding materials and processes shall be as currently permitted by the applicable code of construction or post-construction code for the component. Welding of carbon and low alloy steels should be performed with low hydrogen electrodes and processes.

4.2 Tubeside Repair by Plugging

Repair of tubes may be accomplished by plugging the tube at the tubesheet with a welded or mechanical attachment.

(a) All tubes that are plugged should be pierced to provide for venting and draining. When doing so, vertical tubes should be pierced at each end, and horizontal tubes should be pierced on top and bottom of the tube. Piercing of each tube prevents possible plug blowout and permits the validation of the integrity of the tube plug, see para. 4.2(b)(4). Large temperature differential between tubeside and shell side may require the tube to be cut in two.

--`,`,`,`,,`````,`,`,`,`,,,`-`,`,`,`,`,`---

Fig. 1 Typical Friction Fit Tapered Tube Plug

(b) Friction fit tapered plugs (Fig. 1) shall only be used in services that meet all of the following conditions, unless an engineering evaluation is performed indicating the acceptability of these plugs in other services:

(1) shell-side operating pressure 1.5 MPa (200 psi) or less

(2) shell-side operating temperature 205°C (400°F) or less

(3) tube-to-tubesheet joints are expanded and not welded

NOTE: Inspection of the expanded tube for tube thinning should be made to ensure that installation of the plug does not further damage the tube leading to seal failure between the plug and the tubes.

(4) tapered plugs that are installed where tubes are not pierced can present a serious safety hazard. If the tube cannot be pierced, the tube should be pulled or other measures should be taken to ensure personnel protection, such as welding the plug to the tubesheet and draining all liquids from the tube being plugged.

(c) Mechanical plugs (Fig. 2) should be considered in situations where friction fit tapered plugs are not appropriate for the pressure and/or temperature of service or other mechanical/environmental conditions. These types of plugs have been used in services of up to 50 MPa (7,000 psi) and 595°C (1,100°F). Mechanical plugs are typically installed by a pneumatic or hydraulic system. See Fig. 3. Other styles of plugs may be considered for higher pressures. Consideration shall also be given to the following:

(1) tubes with internal surface severely corroded or cracked

(2) when the tube and the plug have dissimilar metallurgy

(3) installation in severely corrosive service

(4) condition of the mechanical joint of the tube-to-tubesheet in rolled tube situations

(d) A plug map should be developed to record the number and location of tubes that have been plugged. Additionally, the number of tubes, cumulative number of tubes versus the duration, should be charted. When the sharp turn in tube failure numbers occurs, replacement of the tube bundle should be considered. See Fig. 4 for example chart.

(e) Tracking of pressure loss due to tube pluggage should be considered as some exchanger types cannot function properly beyond certain tubeside pressure losses. Provisions for internal bypass should be considered if repair is not performed in order to prevent failure of pass partitions. Proper design of this bypass can be determined from industry references in section 7 of this Article.

4.3 Tubeside Repair by Pulling Tubes

(a) Pulling the tube from the exchanger and plugging the tubesheet as described in para. 4.2 should be considered as a repair option when plugging is not a viable alternative, or when the tube will be retained for laboratory metallurgical analysis or other specific examination.

(b) When pulling a tube and not replacing, potential damage to the baffle could occur and consideration to replacing the tube should be made. Consultation with a heat transfer specialist may also be necessary.

4.4 Tubeside Repair by Replacement

Repair may be performed by tube replacement which may be accomplished in one of the following methods:

(a) replacing individual tubes, which may include repair/refurbishing of the tubesheet in the area of the subject tube

(b) replacement of the entire tube bundle. See para. 3.2(c).

4.5 Tubesheet Repair

4.5.1 Weld Repair of Cracks

(a) Repair of general cracks that are not completely through the thickness of the tubesheet and are not in the ligaments may be made in accordance with the guidelines of Article 3.4.

(b) Repair of general cracks that are through the thickness of the tubesheet and not in the ligaments may be repaired by preparing a U- or V-shaped groove to the full depth and length of the crack and then filling the groove with weld metal in accordance with paras. 4.5.1 and 4.5.2.

(c) Repair of cracks in the ligament area of the tubesheet may be made in accordance with (a) or (b) above. Consideration may also be given to performing an engineering analysis to determine if the equipment may continue to operate with the damaged tubesheet. This analysis may be performed in accordance with API 579/ASME FFS-1 or other post-construction standard.

Fig. 2 Typical Mechanical Fit Tube Plugs

Fig. 3 Typical Installation of Mechanical Fit Tube Plugs

(©2006 Photo courtesy of EST Group Inc., used with permission.)

(d) When making tubesheet repairs, consideration should be given to the impact of this repair on the tubes in the general area of the repair. The following actions may be necessary:

(1) removal of tubes in the general area of the repair. See para. 4.3(b).

(2) repair of the tube-to-tubesheet joints.

4.5.2 Face Repair by Overlay and Machining

(a) General and localized thinning of tubesheets may be repaired by overlay welding and remachining of the face.

(b) See Article 2.2, for additional items of consideration.

4.6 Tube-to-Tubesheet Joint Repair

4.6.1 Reexpanding

(a) Cleaning and inspection shall be performed to determine the condition of the tube-to-tubesheet joint prior to performing this type of repair. See para. 4.1.

(b) Tube-to-tubesheet joints with leaks of a small flow rate, otherwise known as weeping tubes, where no apparent damage has occurred to the seating surfaces, may be reexpanded to obtain an acceptable mechanical fit of tube to tubesheet. Rerolling is one acceptable method of reexpanding.

(c) Prior to reexpanding, the existing inside diameter of the tube in the tubesheet shall be determined as well as the loss of material due to corrosion/erosion. Calculations for allowable maximum inside diameter shall be based on measured field conditions, tube properties, and tubesheet ligament condition.

Fig. 4 Sample Chart: Number of Tube Failures by Month

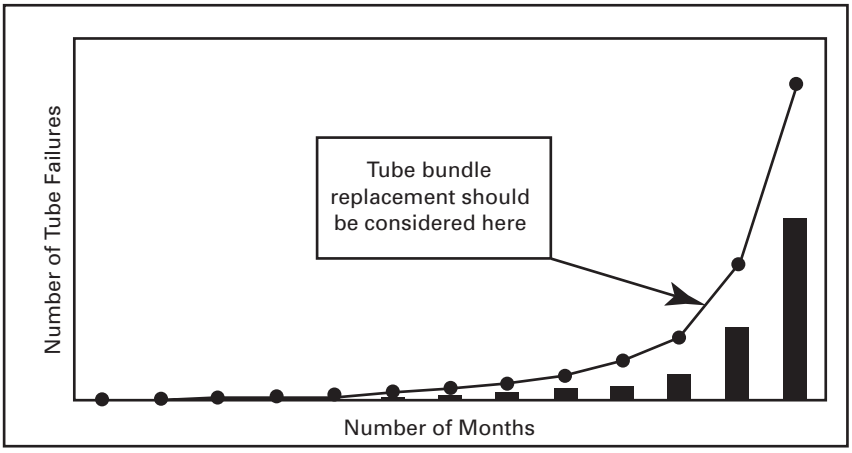

(d) See ASME BPVC Section VIII, Division 1, Appendix HH for additional considerations.

4.6.2 Weld Buildup Repair of Tube Holes and Machining

(a) When a tube is replaced and the tube hole has been damaged, repair may be effected by weld buildup and machining of the hole.

(b) All welded tube hole repairs shall be made using qualified welding procedures. Welders, and welding operators shall be qualified in accordance with the requirements of the applicable code of construction or the applicable post-construction code. Welding procedure qualifications shall include impact tests if required by the applicable code of construction for the tubesheet.

(c) Welding materials and processes shall be as currently permitted by the applicable code of construction or post-construction code for the tubesheet. Welding of carbon and low alloy steels should be performed with low hydrogen electrodes and processes.

(d) Machining of the hole shall be to original manufacturer's specifications for diameter and grooving.

4.6.3 Seal Welding or Strength Welding

(a) Tube-to-tubesheet welds shall be in accordance with the applicable code of construction or post-construction code.

(b) If seal welds are to be made, consideration shall be given to the mechanical tube-to-tubesheet joint to ensure its strength. If seal welds are determined to be inadequate, the weld shall be full strength to ensure the integrity of the joint.

(c) All welds shall be made using qualified welding procedures. Welders, and welding operators shall be qualified in accordance with the requirements of the applicable code of construction or the applicable post-construction code. Welding procedure qualifications shall include impact tests as required by the applicable code of construction for the tubesheet.

(d) Welding materials and processes shall be as currently permitted by the applicable code of construction or post-construction code for the tubesheet. Welding of carbon and low alloy steels should be performed with low hydrogen electrodes and processes.

4.7 Repair of Pressure Containment Components

Repairs to the heat exchanger shell may be performed to the original code of construction or applicable post-construction code. See also Article 2.1 and Article 2.2.

5 EXAMINATION

Examination of heat exchangers typically covers three areas; external, internal, and tube bundle. It is not necessary for each inspection to have the same frequency.

5.1 Examination of Tubes and Tube Bundle

It is important for the proper examination technique to be selected for the application at hand. The following nondestructive examination (NDE) techniques should be considered for the given application. See also Table I-1 in Mandatory Appendix I for effectiveness of examination methods. Other examination methods may be chosen by the owner/operator, as follows:

(a) Eddy Current Examination (ET) is generally selected for inspection of nonferromagnetic tubes, or those that are slightly magnetic. Note that the sensitivity of this method decreases for the U-bend portion of U-tube bundles.

(b) Remote Field Eddy Current (RFET) is generally used for inspection of ferromagnetic tubes. Its sensitivity and accuracy may be less than desired or required and will require a higher number of tubes to be inspected. It is a quicker method than ultrasonic methods.

(c) Partial Saturation Eddy Current (PSET) can locate and size cracks in ferromagnetic tubes. It might not be sensitive to O.D. defects.

(d) Magnetic Flux Leakage (MFL) may also be selected for inspection of ferromagnetic tubes. However, sensitivity of this method can be poor for carbon steel tubes, and might only be best at determining the overall condition of the tube, not determining individual defect location.

(e) Ultrasonic examination systems designed to measure tube wall thickness may be used for small heat exchangers, where damage may be localized, or for validation of other NDE results. These ultrasonic examination systems are particularly suited for carbon steel tubes due to the lack of sensitivity of other NDE methods. One type of system is the Internal Rotary Ultrasonic Inspection (IRIS) system. IRIS is an accurate NDE method for detecting and sizing I.D. and O.D. metal loss in tubes. Another type of system is Shear Wave IRIS (SWIRIS) and this can be effective for detecting I.D. and O.D. cracks. Both IRIS and SWIRIS require clean tubes.

(f) Other NDE methods may be more appropriate for the inspection. Consideration should be given to the use of radiography (RT) or video probe inspection. These methods may be better suited for inspection of the U-bend portion of U-tube bundles.

(g) Consideration should be given to the monitoring and trending of tube condition as part of a predictive maintenance and/or replacement program.

(h) The minimum number of tubes to be inspected may be determined by the methods provided in Mandatory Appendix I.

5.2 Examination of Tube-to-Tubesheet Repair

Repairs shall be examined by one or more of the following methods:

(a) pressure or leak testing on the shell side; see section 6

(b) liquid penetrant examination (PT) in accordance with the applicable code of construction or post-construction code

(c) visual examination (VT) in accordance with ASME BPVC Section V, Article 9

5.3 Examination of Tubesheet Repair

(a) VT in-process weld examination shall be performed.

(b) Surface examination by PT shall be performed at the completion of the weld repair.

(c) Volumetric examination by UT should be considered when there is a possibility of additional flaws being introduced to the tubesheet during the repair.

5.4 Examination of Pressure Containment Components Repairs

(a) All welded repairs should receive VT and PT or MT examination, especially for heat exchangers deemed critical to the operation and/or process safety of the facility.

(b) Where possible, welded repairs shall receive volumetric examination by RT or UT.

6 TESTING

Following completion of the inspection, a pressure test or tightness test in accordance with Article 5.1 should be considered, particularly if the integrity of the tube-to-tubesheet joint is in question.

7 REFERENCES

API Standard 660, Shell and Tube Heat Exchangers for General Refinery Services, 2003 Edition

API RP 579/ASME FFS-1, Fitness-For-Service, 2nd Edition, 2007

Publisher: American Petroleum Institute (API), 1220 L Street NW, Washington, DC 20005-4070

ASME Boiler and Pressure Vessel Code, 2007 Edition, Section V — Nondestructive Examination

ASME Boiler and Pressure Vessel Code, 2007 Edition, Section VIII, Division 1 — Rules for Construction of Pressure Vessels

ASME PCC-2, Repair of Pressure Equipment and Piping

ASME PCC-3, Inspection Planning Using Risk Based Methods

Publisher: The American Society of Mechanical Engineers (ASME). Three Park Avenue, New York, NY 10016-5990; Order Department: 22 Law Drive, P.O. Box 2300, Fairfield, NJ 07007-2300

ASTM E 2283-03, Standard Practice for Extreme Value Analysis of Nonmetallic Inclusions in Steel and Other Microstructural Features

Publisher: ASTM International (ASTM), 100 Barr Harbor Drive, P.O. Box C700, West Conshohocken, PA 19428-2959

Wolf, Gerald M. and Adams, Robert B., An Improved Plugging System for HX Tubing, EPRI BPO Conference paper, June 1996

Publisher: The Electric Power Research Institute (EPRI), 3412 Hilview Avenue, Palo Alto, CA 94304

Standards for Power Plant Heat Exchangers, 4th Edition, 2004

Standards for Closed Feedwater Heater, 7th Edition, 2004

Publisher: Heat Exchange Institute, Inc. (HEI), 1300 Summer Avenue, Cleveland, OH 44115-2815

Standards of the Tubular Exchanger Manufacturers Association, Eighth Edition

Publisher: Tubular Exchanger Manufacturers Association, Inc. (TEMA), 25 North Broadway, Tarrytown, NY 10591

Andreone, Carl F. and Yokell, S., Tubular Heat Exchanger Inspection, Maintenance and Repair, McGraw-Hill, New York, NY, 1997.

Wang, W. David, Ph.D., "Extreme Value Analysis of Heat Exchanger Tube Inspection Data," Proceedings of PVP2006-ICPVT-11, 2006 ASME Pressure Vessels and Piping Division Conference, July 2006.

Bypass-calculation-R3.xls, http://www.mgt-inc.com/docs/Bypass-calculation-R3.xls.

Article 3.12, Mandatory Appendix I
Methods for Determining Minimum Number of Tubes to Inspect

I-1 Introduction

This Appendix provides general good recommendations and requirements for determining the number of tubes to inspect by different methods. The user may select any method, and may also deviate from the recommendations and requirements of each method based on the requirements of the heat exchanger.

I-1.1 Fixed Tube Count

The following minimum number of tubes inspected should be considered:

(a) 50 tubes or 25% of tube total, whichever is greater, for heat exchangers with a total tube count of less than 500 tubes.

(b) 20% of tube total for heat exchangers with a total tube count of 500 tubes or more, up to 750 tubes.

(c) 15% of tube total for heat exchangers with a total tube count of 750 tubes or more, up to 1,000 tubes.

(d) 10% of tube total for heat exchangers with a total tube count of more than 1,000 tubes.

I-1.2 Tube Bundle

The following areas of the tube bundle should be examined at a minimum:

(a) the first three rows adjacent to the inlet nozzle and the last two rows adjacent to the exit nozzle.

(b) every second tube around the perimeter of the bundle. For multipass heat exchangers, the perimeter of each pass shall be included.

(c) a selection of tubes in the interior section of the bundle.

(d) areas with a history of active damage mechanisms.

(e) areas that have not previously been examined.

(f) failure of 10% of the tubes examined shall require an additional 10% of tubes to be examined in the examined area, as per (a) through (e).

I-1.3 Use of Inspection Planning

(a) An inspection planning program may be implemented to determine the number of tubes to inspect and the frequency at which the tubes shall be inspected.

(b) Program implementation guidelines are provided in ASME PCC-3. The following factors should be considered:

(1) inspection effectiveness required, see Table I-1 for various effectiveness and the associated methods of inspection.

(2) maximum inspection interval permitted.

(3) type of inspection required for the suspected damage mechanism. See Table I-1 for additional details.

(c) inspection methods (see para. 5.1)

I-1.4 Use of Extreme Value Analysis (EVA)

(a) Use of EVA makes it possible to accurately assess the remaining life of large numbers of tubes using relatively minimal data.

(b) EVA assessment is based on ASTM E 2283, "Standard Practice for Extreme Value Analysis of Nonmetallic Inclusions in Steel and Other Microstructural Features."

(c) Use of EVA to assess the maximum wall loss data has been described in conference publications; see Table I-1, Note (4).

(d) The EVA method and results may be incorporated into an inspection planning assessment.

(e) With smaller sample sizes, ideally 20 to 30 tubes regardless of the number of tubes in the exchanger, the appropriate inspection effectiveness may be achieved by using the lower bound value of 99%, 95%, 90%, and 80% confidence intervals.

Table I-1 Inspection Effectiveness Table

Inspection Effectiveness Category	Damage to Consider	Inspection Method	Number of Ferrous Tubes by Intrusive Inspection Methods	Number of Nonferrous Tubes by Intrusive Inspection Methods	Number of Tubes by Nonintrusive Inspection Methods
Highly effective	Wall loss [excluding MIC[1]]	IRIS[2]	80% to 100%	80% to 100%	Not applicable
	...	IRIS and EVA[3] 99% CI as lower bound	20 to 30	20 to 30	...
	...	RFET[4] or MFL[5]	100% and pull 2 worst tubes for lab analysis	Not applicable	...
	...	ET[6]	Not applicable	100%	...
	Cracking	SWIRIS[7]	100%	Not applicable	...
	Cracking or MIC	ET	Not applicable	100%	...
Usually effective	Wall loss or localized and general corrosion (excluding MIC)	IRIS	60% to 80%	60% to 80%	Profile RT 50% at 0 deg and 90 deg
	...	IRIS and EVA 95% CI as lower bound	20 to 30	20 to 30	...
	...	RFET or MFL	100% and use IRIS on 2 worst tubes	Not applicable	...
	PSET[8]	90%	Not applicable	...	
	...	EC	Not applicable	80%	...
	Cracking	SWIRIS	80%	Not applicable	...
	...	PSET	100%	Not applicable	...
	Cracking or MIC	EC	Not applicable	80%	...
Fairly effective	Wall loss (excluding MIC)	IRIS	40% to 60%	40% to 60%	Not applicable
	...	IRIS and EVA 90% CI as lower bound	20 to 30	20 to 30	...

Table I-1 Inspection Effectiveness Table (Cont'd)

Inspection Effectiveness Category	Damage to Consider	Inspection Method	Number of Ferrous Tubes by Intrusive Inspection Methods	Number of Nonferrous Tubes by Intrusive Inspection Methods	Number of Tubes by Nonintrusive Inspection Methods
	. . .	RFET or MFL	80% and use IRIS on 2 worst tubes	Not applicable	. . .
	PSET	70%	Not applicable	. . .	
	. . .	EC	Not applicable	60%	. . .
	Cracking	SWIRIS	60%	Not applicable	. . .
	. . .	PSET	80%	Not applicable	. . .
	. . .	RFET or MFL	100%	. . .	. . .
	Cracking or MIC	EC	Not applicable	50%	. . .
Poorly effective	Wall loss (excluding MIC)	IRIS	20% to 40%	20% to 40%	Not applicable
	. . .	IRIS and EVA 80% CI as lower bound	20 to 30	20 to 30	. . .
	. . .	RFET or MFL	60% and use IRIS on 2 worst tubes	Not applicable	. . .
	PSET	50%	Not applicable	. . .	
	. . .	EC	Not applicable	40%	. . .
	Cracking	SWIRIS	40%	Not applicable	. . .
	. . .	PSET	60%	Not applicable	. . .
	. . .	RFET or MFL	80%	. . .	. . .
	Cracking or MIC	EC	Not applicable	30%	. . .

NOTES:
(1) MIC — microbiologicaly induced corrosion
(2) IRIS — internal rotary inspection system
(3) EVA — extreme value analysis
(4) RFET — remote field eddy current
(5) MFL — magnetic flux leakage
(6) ET — eddy current testing
(7) SWIRIS — shear wave internal rotary inspection system
(8) PSET — partial saturation eddy current

Article 3.12, Mandatory Appendix II
Examination of Pressure Containment Components

II-1 EXAMINATION

Examination of the shell, channel, and other pressure containment components, excluding the tubes, may be performed by any of the following methods:

(a) RT
(b) UT
(c) MT
(d) VT
(e) internal inspection by removal of tube bundle
(f) internal inspection by remote camera or other inspection probe instrument

II-2 INSPECTION

The inspection of these components should occur concurrently with the inspection of the tubes.

II-3 SUITABILITY

Pressure containment components are particularly suited for inspection planning methods such as described by ASME PCC-3.

PART 4
NONMETALLIC AND BONDED REPAIRS

Article 4.1
Nonmetallic Composite Repair Systems for Pipelines and Pipework: High-Risk Applications

(08)

1 DESCRIPTION

1.1 Scope

This Article provides the requirements for the repair of pipework and pipelines using a qualified Repair System.

The Repair System is defined as the combination of the following elements for which qualification testing has been completed:

(a) substrate (pipe)
(b) surface preparation
(c) composite material (repair laminate)
(d) filler material
(e) adhesive
(f) application method
(08) *(g)* curing protocol

The composite materials allowed for the Repair System include, but are not limited to, glass, aramid, or carbon fiber reinforcement in a thermoset polymer (e.g., polyester, polyurethane, phenolic, vinyl ester, or epoxy) matrix. Fibers shall be continuous.

1.2 Applicability

This Article addresses the repair of pipework and pipelines originally designed in accordance with a variety of pipe standards, including ASME B31.1/B31.3/B31.4/B31.8, and ISO 15649 and 13623.

The Repair System qualification, design, installation, and operational requirements provided in this Article covers situations involving damage commonly encountered in piping systems.

The following type of defects may be repaired (and are assessed in para. 3.3.3):

(a) external corrosion where structural integrity is compromised. In this case it is probable the application of a Repair System will arrest further deterioration.

(b) external damage such as dents, gouges, fretting, or wear (at supports).

(c) cracks may be repaired in accordance with this Article if they are prepared in accordance with Article 3.4.

(d) either internal corrosion or erosion, or both, which may or may not be leaking. In this case, it is probable that corrosion will continue and the assessment must take this into account.

(e) leaks.

(f) manufacturing or fabrication defects.

Internal fluids and external environments shall be considered with respect to compatibility of the composite. The pressure/temperature limits are dependent on the type of damage being repaired and the Repair System being used. These limits are determined by the testing and qualification requirements of this Article. A lower temperature limit of −50°C (−58°F) shall be assumed unless a lower temperature capability is demonstrated through qualification testing.

This Article applies to repairs to both metallic and nonmetallic (substrate) pipe materials.

1.3 Risk Assessment

An assessment of the risks associated with the defect and repair method shall be completed in line with the relevant industry best practice. When applying a Repair System in accordance with this Article the following items shall be considered:

(a) assessment of the nature and location of the defects

(b) design and operating conditions for the pipe and contents (including pressure, temperature, sizes, and combinations thereof)

(c) repair life (see para. 1.4)

(d) geometry of the pipe being repaired

(e) hazards associated with system service

(f) the availability of the personnel with the necessary skills

(g) the ease with which it is practicable to execute surface preparation operations

(h) performance under upset and major incident situations including impact, abrasion, fire, explosion, collision, and environmental loading

(i) failure modes

(j) inspectability

(k) the Repair System materials

The information and data describing any hazards shall be included in the method statement (para. 4.4) to be used on site.

The application of these Repair Systems will typically change the mode of failure from rupture to a leak; the consequences of failure will therefore be reduced. A repair applied in accordance with this Article will also reduce the probability of failure.

1.4 Repair Life

The repair life is the useful service period of the Repair System, as defined by the design assessment. This may be limited by the defect type and service conditions (e.g., internal corrosion). The repair life will depend on the Repair System.

1.5 Defect Assessment

Defect assessment in the host pipe shall be performed with the prevailing standard, e.g., ASME B31G, API 579/ASME FFS-1, BS 7910, or equivalent.

2 LIMITATIONS

(08) 2.1 Additional Requirements

Part 1 of this Standard contains additional requirements and limitations. This Article shall be used in conjunction with Part 1.

2.2 Qualification

The use of this Article is limited to those Repair Systems for which the qualification testing described in Mandatory Appendix II has been completed. Any change to any element of the Repair System (see para. 1.1) constitutes a different and therefore new Repair System. This new Repair System shall require qualification as described in Mandatory Appendix II. See also para. 3.6. The Repair System supplier shall state the type of defects (as listed on the Guide for Selection) to which their Repair System has been qualified against.

2.3 Installation

The installation procedures shall be those used in the Repair System qualification. If the installation procedures are not those used in the Repair System qualification, then the repair is not in compliance with this Article.

3 DESIGN

3.1 Symbols (08)

These are the symbols used throughout this Article.

D = external pipe diameter, m (in.)

d = diameter (or diameter of the equivalent circle) of the defect or leaking region, m (in.)

E = bending modulus for the composite laminate determined by test according to Table 1, N/m^2 (psi)

E_a = tensile modulus for the composite laminate in the axial direction determined by test according to Table 1, N/m^2 (psi)

E_c = tensile modulus for the composite laminate in the circumferential direction determined by test according to Table 1, N/m^2 (psi)

E_s = tensile modulus for steel (or pipe material), N/m^2 (psi)

F = sum axial tensile loads due to pressure, bending, and axial thrust, N (lb). Note that the axial tensile load generated by an applied bending moment is $(4M/D)$

f = service factor from Table 4

f_c = cyclic derating factor

f_T = temperature derating factor

G = shear modulus for the composite laminate, N/m^2 (psi)

g = acceleration of gravity, 9.81 m/s^2 (384 in./sec^2)

HDT = heat distortion temperature, °C (°F)

h = buried depth of pipeline, m (in.)

L = total axial repair length, m (in.)

L_{defect} = axial length of the defect, mm (in.)

L_{over} = overlap length, m (in.)

L_{taper} = taper length, m (in.)

l = axial length of defect, m (in.), to be used in test specified in Mandatory Appendix III

M = applied bending moment, N·m (lb-in.)

N = number of cycles

n = number of wraps

P = internal design pressure, N/m^2 (psi)

P_e = applied external pressure, N/m^2 (psi)

$P_{ext,soil}$ = external soil pressure, N/m^2 (psi)

P_f = failure pressure of the undamaged pipe, N/m^2 (psi)

P_{live} = internal pressure within the pipe during application of the repair, N/m^2 (psi)

P_{max} = maximum internal pressure of the pressure cycle, N/m^2 (psi)

P_{min} = minimum internal pressure of the pressure cycle, N/m^2 (psi)

P_s = MAWP for the pipe with the defect determined from API 579, ASME B31G, or equivalent, N/m^2 (psi), including consideration of future corrosion allowance

P_{test} = test pressure, N/m^2 (psi)

R_c = cyclic loading severity, defined as: $R_c = P_{\min}/P_{\max}$
s = SMYS (Specified Minimum Yield Strength derated as required by the appropriate construction code) of pipe, N/m^2 (psi)
s_a = measured yield strength of steel pipe or mill certification, N/m^2 (psi)
s_c = characteristic tensile strength of composite in circumferential (hoop) direction, where the characteristic strength is equal to the mean strength minus two standard deviations, N/m^2 (psi)
s_{lt} = 95% lower confidence limit of the long-term strength determined by performance testing in accordance with Mandatory Appendix II, N/m^2 (psi)
T_d = design temperature of Repair System, °C (°F)
T_g = glass transition temperature, °C (°F)
T_m = upper temperature limit of Repair System, °C (°F)
t = nominal wall thickness of original pipe, m (in.)
t_{layer} = ply or layer thickness of the composite repair material, m (in.)
$t_{\min}$ = minimum repair thickness, m (in.)
t_{repair} = design repair thickness, m (in.)
t_s = minimum remaining wall thickness of the pipe, m (in.)
W = width of slot defect, m (in.)
w = width of defect in hoop direction to be used in test specified in Mandatory Appendix III, m (in.)
α_a = thermal expansion coefficient of the repair laminate in the axial direction by determined test in accordance with Table 1, $°C^{-1}$ ($°F^{-1}$)
α_c = thermal expansion coefficient of the repair laminate in the circumferential direction by determined test in accordance with Table 1, $°C^{-1}$ ($°F^{-1}$)
α_s = thermal expansion coefficient of the substrate or original pipe, $°C^{-1}$ ($°F^{-1}$)
γ = toughness parameter (energy release rate) for the composite — pipe interface measured according to Mandatory Appendix IV, J/m^2 (in.-lb/in.^{2})
γ_{soil} = specific soil density, kg/m^3 (lb/in.^{3}) [in absence of data assume γ_s = 2 000 kg/m^3 (0.072 lb/in.^{3})]
ΔT = temperature difference (absolute) between operation and installation, °C (°F)
ϵ_a = allowable axial strain obtained from eq. (9)
ϵ_c = allowable circumferential strain obtained from eq. (9)
ϵ_{a0} = allowable axial strain obtained from Table 3
ϵ_{c0} = allowable circumferential strain obtained from Table 3
ϵ_t = thermal strain
τ = lap shear strength, N/m^2 (psi)
υ_{ca} = Poisson's ratio for the composite laminate in the circumferential direction (load in circumferential direction, contraction in axial direction) determined by test according to Table 1

3.2 Repair System Qualification Data

Qualification of the Repair System shall be completed in accordance with Table 1 and Mandatory Appendix II.

Equivalent national or international published test methods are also acceptable.

Materials performance and test data shall be measured by a certified or nationally accredited test facility, or certified by a registered Professional Engineer (or international equivalent).

Repair System qualification data shall be measured for each family of metal substrates (e.g., carbon steel, low- and high-alloy steel, stainless steel, etc.).

3.2.1 Basic Material Documentation. This shall include a statement of the polymer systems, including reinforcements used, and any standards to which they are supplied. Basic data on material compatibility with the working environment shall also be available. It shall be ensured that any chemical interaction between the composite and pipe will not cause further degradation in the surface of the pipe. Consideration may need to be given to the effects of the polymer systems and their associated curing agents. Particular attention may need to be given to CFRP laminates and the potential for bimetallic (galvanic) corrosion of the host pipe.

3.2.2 Surface Preparation. The durability of a bonded assembly under applied load is determined by the quality of the surface preparation used. The specific method of surface preparation is an integral part of the Repair System and its qualification. Any change in the surface preparation method requires requalification of the Repair System (see Mandatory Appendix VIII).

3.2.3 Short-Term Test Data. These shall include tensile strength, ultimate tensile strain, and modulus in both the hoop and axial directions, and the strength of the adhesive bond between the repair laminate and the substrate material and optionally the energy release rate of the Repair System.

3.2.4 Long-Term Test Data. These shall include the strength of the adhesive bond between the repair laminate, substrate, and filler material and optionally the ultimate tensile strain of the repair laminate. "Long-term" is defined as greater or equal to 1,000 hr.

Table 1 Repair System Required Material and Performance Properties

	Material Property	International Test Method	ASTM Test Method
Mechanical properties	Young's modulus	ISO 527	ASTM D 3039
	Poisson's ratio	ISO 527	ASTM D 3039
	Shear modulus (in-plane)	. . .	ASTM D 5379
	Thermal expansion coefficients	ISO 11359-2	ASTM E 831
	Glass transition temperature of polymer (T_g)	ISO 11357-2	ASTM D 6604, ASTM E 1640, or ASTM E 831
	Heat distortion temperature (HDT)	ISO 75	ASTM D 648
	Barcol hardness	BS EN 5	ASTM D 2583
	Shore hardness	ISO 868	ASTM 2240
	Bending modulus	ISO 178	ASTM D 790
Adhesion strength	Lap shear	BS EN 1465	ASTM D 3165
Performance data	Long-term strength (optional)	Mandatory Appendix V	. . .
	Energy release rate (optional)	Mandatory Appendix IV	. . .
	Structural strengthening (optional)	Mandatory Appendix III	. . .

3.3 Required Data

The following data shall be supplied for each repair. The detail to which these requirements are fulfilled will be determined by the output of the risk assessment. Original equipment design data, and maintenance and operational histories shall be provided by the owner and material data shall be provided by the Repair System supplier. The availability of relevant data should be considered in the risk assessment.

An example of a design data sheet is provided in Mandatory Appendix I.

3.3.1 Original Equipment Design Data. The following items may be relevant original equipment design data:

(a) piping line lists or other documentation showing process design conditions and a description of the piping class including material specification, pipe wall thickness, and pressure–temperature rating

(b) piping isometric drawings including sufficient details to permit a piping flexibility calculation if this analysis is deemed necessary

(c) specification of all operating mechanical loads not included in the above, including upset conditions

(d) original design calculations

3.3.2 Maintenance and Operational History. The following items may be relevant maintenance and operational history:

(a) documentation of any significant changes in service conditions including pressure, temperature, fluid content, and corrosion rate

(b) past service conditions

(c) summary of all alterations and past repairs local to the pipe section of concern

(d) inspection reports detailing the nature and extent of damage to be repaired

3.3.3 Service Condition Data. The following data shall be determined:

(a) lifetime requirements/expectation of the repair service life

(b) required design and operating pressures (internal and external)/temperatures

(c) expected future service conditions

(d) if applicable, MAWP as stated by the owner or as calculated according to the requirements of ASME B31G, API 579, or BS 7910

(e) the influence of metallurgical defects, if applicable on the MAWP shall also be considered (08)

3.4 Design Methodology

3.4.1 Overview. The design of the repair laminate shall be carried out using the requirements in the following sections. There are two design cases:

(a) Type A Design Case. Pipes not leaking, requiring structural reinforcement only. One of the following three design methods shall be used:

(1) Include allowance for original pipe (see para. 3.4.3) where yielding of the pipe may or may not be included.

(2) Exclude allowance for original pipe (see para. 3.4.4).

(3) Long-term performance test data (see para. 3.4.5).

(08) **Table 2 Service Temperature Limits for Repair Systems**

	Substrate Leaking, T_m	Substrate Not Leaking, T_m
T_g can be measured	T_g −30°C (54°F)	T_g −20°C (36°F)
T_g cannot be measured	HDT −20°C (36°F)	HDT −15°C (27°F)

(b) Type B Design Case. Pipes requiring structural reinforcement and sealing of through-wall defects (leaks).

(1) The design method in para. 3.4.6 shall be used in addition to the Type A design case.

(2) For pipes with active internal corrosion, the repair laminate shall be designed on the assumption that a through-wall defect will occur if the remaining wall thickness at the end of service life is expected to be less than 1 mm (0.04 in.).

The greater thickness of the Type A and Type B design case shall be taken as the repair laminate thickness, t_{repair}. The Type B case is often the limiting design case.

Paragraphs 3.4.9 and 3.4.10 shall be considered for each design case and applied where appropriate, with the largest thickness being taken as the repair laminate thickness, t_{repair}.

(08) **3.4.2 Service Temperature Effects.** For design temperatures, T_d, greater than 40°C (104°F), the Repair System shall not be used above the glass transition temperature, T_g, less 30°C (54°F). For Repair Systems where T_g cannot be measured, the Repair System shall not be used above the heat distortion temperature (HDT) less 20°C (36°F).

For Repair Systems where the substrate is not leaking (Type A design case), the temperature limit can be relaxed to T_g less 20°C (36°F) or HDT less 15°C (27°F). T_g or HDT shall be measured in accordance with Table 1.

Table 2 summarizes these upper temperature limits for the Repair System.

For service temperatures less than or equal to 40°C (104°F) adequate cure of the field-applied repair laminate or adhesive may be demonstrated by Barcol hardness or Shore hardness in accordance with Table 1. For these conditions no acceptance criteria linked to T_g or HDT are stipulated. Measured hardness values shall be not less than 90% of the minimum obtained from Repair System qualification.

In absence of other Repair System qualification data [see para. II-3(b) of Mandatory Appendix II], for service temperatures greater than 40°C (104°F) the allowable strains to be used in eqs. (7) and (8), and the service factors to be used in eqs. (9), (12), (13), and (14) shall be down-rated by the temperature factor, f_T, given in eqs. (1) and (2).

(Temperatures in Celsius)

$$f_T = 6 \times 10^{-5} (T_m - T_d)^2 + 0.001 (T_m - T_d) + 0.7014 \quad (1)$$

(Temperatures in Fahrenheit)

$$f_T = 2 \times 10^{-5} (T_m - T_d)^2 + 0.006 (T_m - T_d) + 0.7014 \quad (2)$$

(08) **3.4.3 Pipe Allowable Stress.** Use of the design method in this section is appropriate if the contribution of the pipe is to be included in the calculation for load-carrying capability.

For piping systems, eqs. (3) and (4) shall be used. In the derivation of these equations it is assumed that the underlying substrate does not yield.

For hoop stresses due to internal pressure, the minimum repair laminate thickness, t_{min}, is given by

$$t_{min} = \frac{D}{2s} \cdot \left(\frac{E_s}{E_c}\right) \cdot (P - P_s) \quad (3)$$

For axial stresses due to internal pressure, bending, and axial thrust, the minimum repair laminate thickness, t_{min}, is given by

$$t_{min} = \frac{D}{2s} \cdot \left(\frac{E_s}{E_c}\right) \cdot \left(\frac{2F}{\pi D^2} - P_s\right) \quad (4)$$

The design repair laminate thickness, t_{repair}, shall be the greater value determined from eqs. (3) and (4).

Where the purpose of the Repair System is to strengthen an undamaged section of pipe to carry additional bending or other axial loads, the value of F shall be taken to be the increased total axial load requirement and the value of P_s shall be the original MAWP. The value of F depends on the specific application details and shall be considered by the Repair System designer (outside the scope of this Article).

For pipelines, eq. (5) or (6) shall be used. In the derivation of eqs. (5) and (6) it is assumed that the underlying substrate does yield and the repair laminate is designed based on the allowable strain of the composite. Only hoop loading is considered in determining the design repair laminate thickness.

For hoop strain due to internal pressure, the design repair laminate thickness, t_{repair}, may be calculated by iteration using

$$\epsilon_c = \frac{PD}{2E_c\, t_{repair}} - s\frac{t_s}{E_c\, t_{repair}} - \frac{P_{live} D}{2(E_c t_{repair} + E_s t_s)} \quad (5)$$

If the repair is applied at zero internal pressure, i.e., $P_{live} = 0$, then eq. (5) can be rearranged to give

$$t_{repair} = \frac{1}{\epsilon_c E_c}\left(\frac{PD}{2} - s t_s\right) \quad (6)$$

The assumptions made in deriving eqs. (5) and (6) are that the substrate material is elastic, perfectly plastic, i.e., no strain hardening and that no defect assessment

(08) **Table 3 Allowable (Long Term) Strains for Repair Laminates (No Allowance for Temperature Effects)**

Load Type	Symbol	Rarely Occurring, %	Continuous (Sustained), %
For $E_a > 0.5\ E_c$	ϵ_{c0}	0.40	0.25
For $E_a < 0.5\ E_c$			
Circumferential	ϵ_{c0}	0.40	0.25
Axial	ϵ_{a0}	0.25	0.10

is performed other than use of the minimum remaining wall thickness (of the substrate) to infer the internal pressure at the point of substrate yield.

The value of the allowable strain of the composite in the circumferential direction can be taken from eq. (9) or if performance data are available, from Mandatory Appendix V. The appropriate service factor is taken from Table 4.

3.4.4 Repair Laminate Allowable Strains. Use of the design method in this section is appropriate if the contribution of the original pipe is to be ignored in the calculation for load-carrying capability and if short-term material properties are to be used.

The allowable repair laminate strain design method is a function of design temperature.

For hoop stresses due to internal pressure, the minimum repair laminate thickness, $t_{\min}$, is given by

$$t_{\min} = \frac{1}{\epsilon_c}\left(\frac{PD}{2}\frac{1}{E_c} - \frac{F}{\pi D}\frac{\upsilon_{ca}}{E_c}\right) \tag{7}$$

For axial stresses due to internal pressure, bending, and axial thrust, the minimum repair laminate thickness, $t_{\min}$, is given by

$$t_{\min} = \frac{1}{\epsilon_a}\left(\frac{F}{\pi D}\frac{1}{E_a} - \frac{PD}{2}\frac{\upsilon_{ca}}{E_c}\right) \tag{8}$$

The design repair laminate thickness, t_{repair}, shall be the greater value determined from eqs. (7) and (8).

Rarely occurring events (e.g., pressure excursions above design pressure) may be assessed using the strains given in Table 3, provided that they occur typically less than 10 times in the life of the component with each duration less than 30 min.

The continuous (sustained) long-term allowable strains listed in Table 3 shall only be used if the short-term tensile strain to failure of the repair laminate is at least 1%, otherwise performance data derived according to para. 3.4.5 shall be used. The short-term strain to failure shall be derived from the test carried out to determine the tensile properties of the laminate (Table 1).

Some Repair System suppliers may choose to use laminate analysis to calculate modulus values for laminates built up from a series of different layers. This is satisfactory, provided that the results from the laminate analysis have been validated using measured data.

Table 4 Service Factors for Repair Laminates (08)

Test	Service Factor, f
1,000 hr data	0.5
Design life data	0.67

Thermal expansion coefficients for composite Repair Systems are different than those for the substrate, so thermal stresses will be generated where operating temperatures vary from installation temperature. Where this absolute temperature change is greater than 40°C (72°F), the effect of differential thermal expansion between the repair laminate and the substrate shall be considered in the design assessment.

The allowable repair laminate strains (circumferential and axial) shall be calculated by

$$\begin{aligned}\epsilon_c &= f_T\,\epsilon_{c0} - \Delta T\,(\alpha_s - \alpha_c)\\ \epsilon_a &= f_T\,\epsilon_{a0} - \Delta T\,(\alpha_s - \alpha_a)\end{aligned} \tag{9}$$

where ϵ_{c0} and ϵ_{a0} are from Table 3.

3.4.5 Repair Laminate Allowable Stresses Determined by Performance Testing. (08) Use of the design method in this section is appropriate if performance-based test data are available.

Mandatory Appendix V provides three alternative methods for the determination of long-term failure stress (or strain).

If allowance for pipe is not to be included, then eq. (10) shall be used.

For hoop stresses due to internal pressure, the minimum repair laminate thickness, $t_{\min}$, is given by

$$t_{\min} = \frac{PD}{2}\cdot\left(\frac{1}{f\cdot s_{lt}}\right) \tag{10}$$

For axial stresses due to internal pressure, bending, and axial thrust, the minimum repair laminate thickness, $t_{\min}$, is given by eq. (4) or (8), as appropriate.

The design repair laminate thickness, t_{repair}, shall be the greater of the values determined.

If allowance for the pipe is to be included, then eq. (11) shall be used.

For hoop stresses due to internal pressure, the design repair laminate thickness, t_{repair}, is given by

$$t_{\text{repair}} = \left(\frac{PD}{2} - t_s s\right)\cdot\left(\frac{1}{f\cdot s_{lt}}\right) \tag{11}$$

The service factor, f, is the lesser of that obtained from Table 4 and from the appropriate construction code.

3.4.6 Leaking Pipes and Vessels. A (substrate) pipe or vessel shall be considered to be leaking if the wall thickness at any point of the affected area is determined to be less than 1 mm (0.04 in.) at the end of its life.

Use of the design method in this section is appropriate if the pipe or vessel is leaking or considered to be leaking at the end of its life. The requirements of this section are in addition to those described in para. 3.4.4 or 3.4.5.

For a circular or near-circular defect, the minimum repair laminate thickness, t_{min}, is iterated using eq. (12).

$$P = f_T f \sqrt{\frac{\gamma}{\frac{(1-\nu^2)}{E}\left(\frac{3}{512 t_{min}^3} d^4 + \frac{1}{\pi} d\right) + \frac{3}{64 G t_{min}} d^2}} \quad (12)$$

The value of f is set to 0.333 (or Table 4 if performance data is available).

For noncircular defects that have an aspect ratio less than 5, eq. (12) shall be used where the value of d is selected such that it contains the defect.

Where the Repair System incorporates a plug to allow the repair of a live pipe or vessel, the qualification tests carried out to determine the value of γ (Mandatory Appendix IV) shall be conducted on the whole Repair System including any plug arrangement.

For a slot or rectangular type defect, where the width of the slot, W, satisfies $W \le 1.65\sqrt{Dt_{min}}$, the minimum repair laminate thickness, t_{min}, is iterated using

$$P = f_T f \sqrt{\frac{\gamma}{\frac{(1-\nu^2)}{E}\left(\frac{1}{24 t_{min}^3} W^4 + \frac{\pi}{4} W\right) + \frac{3}{16 G t_{min}} \frac{\left(\frac{4}{5} + \frac{\nu}{2}\right)}{(1+\nu)} W^2}} \quad (13)$$

As the size of the defect increases, the response of the repair laminate will change from that for a plate or beam under transverse loading to that for a cylindrical shell under membrane loading. This circumstance is represented by ($W > t_{min}$) and the response of the repair laminate becomes independent of defect size. For a slot or rectangular type defect, where the width of the slot, W, satisfies $W > 1.65\sqrt{Dt_{min}}$, the minimum repair laminate thickness, t_{min}, is iterated using

$$P = \frac{f_T f}{D}\sqrt{8 E t_{min} \gamma} \quad (14)$$

The value of E and ν^2 in eqs. (12) to (14) shall be taken as $(E_a \cdot E_c)^{0.5}$ and $(\nu_{ca}{}^2 \cdot E_a/E_c)$, respectively, as the repair laminate is anisotropic, i.e., the properties of the material are different in the axial and circumferential directions.

3.4.7 Impact. For repairs to leaking pipes, the supplier shall demonstrate that the Repair System is capable of withstanding a low velocity 5 J (44.3 in.-lb) impact in accordance with the procedure described in Mandatory Appendix VI.

The repair laminate thickness, as designed per this Article, may be insufficient to address external impact loads. Consideration should be given to increasing the laminate repair thickness or providing other methods of protection.

3.4.8 Axial Length of Repair. Unless it can be demonstrated that a shorter repair length is sufficient, the design thickness of the repair laminate shall extend beyond the damaged region in the pipe, L_{over}, by

$$L_{over} = 2.5\sqrt{Dt/2} \quad (15)$$

For repairs designed in accordance with para. 3.4.6, L_{over} shall be the greater of

$$L_{over} = \max.\left(2.5\sqrt{Dt/2} \text{ or } \frac{E_a \epsilon_a t_{repair}}{\tau}\right) \quad (16)$$

The total axial length of the repair is given by

$$L = 2L_{over} + L_{defect} + 2L_{taper} \quad (17)$$

The ends of the repair shall be tapered if the repair thickness is governed by axial loads (paras. 3.4.4, 3.4.5, and 3.4.6). A minimum taper of approximately 5:1 (horizontal/vertical) is recommended. The overlap length shall also be designed to be sufficient to transfer the axial load.

3.4.9 Pipe Fittings. Equations (3) through (11) relate to the stresses in the substrate (pipe) under combinations of internal pressure and axial load. For pipe fittings, such as bends, reducers, tees, and flanges, the stress systems are more complex and may need further consideration. Calculations may be based on pressure stress multipliers for pipe components taken from ISO 14692.

The pressure stress multiplier for bends, reducers, and other components where the membrane stress due to pressure is the same as for simple pipe shall be taken as unity, and for tees shall be taken as 2. The diameter required for repair design is the largest diameter of the component.

3.4.10 Other Design Considerations. Paragraphs 3.4.10.1 through 3.4.10.6 need only be applied if appropriate.

3.4.10.1 External Loads. To resist external pressure or vacuum applied to the Repair System, the minimum repair thickness, t_{min}, is given by

$$t_{min} = D\left[\frac{3(1-\nu^2)P_e}{2E_c}\right]^{1/3} \quad (18)$$

For soil loads, to prevent the collapse of a buried repaired pipeline, the external soil pressure $P_{ext,\,soil}$ shall be less than the collapse resistance of the Repair System, P_c

$$P_{\text{ext, soil}} < \frac{2E_c}{3\,(1-\upsilon^2)}\left(\frac{t_{\min}}{D}\right)^3 \tag{19}$$

where

$$P_{\text{ext, soil}} = \frac{4}{\pi D}\left[D\left(h+\frac{D}{2}\right) - \frac{\pi D^2}{8} + \frac{1}{3}\left(h+\frac{D}{2}\right)^2\right] g\gamma_{\text{soil}}$$

where υ^2 is defined as $(v_{ca}{}^2 \cdot E_a/E_c)$.

3.4.10.2 Cyclic Loading. Cyclical loading shall be considered in the risk assessment for the application of the Repair System.

Cyclic loading is not necessarily limited to internal pressure loads. Thermal and other cyclic loads should also be considered when assessing cyclic severity.

If the predicted number of pressure or other loading cycles is less than 7,000 over the design life, then cyclic loading does not require consideration as per ISO 14692.

If the predicted number of pressure or other loading cycles exceeds 7,000 over the design life, then cyclic loading shall be considered using eqs. (20) and (21). The equations are conservative for lower numbers of cycles.

If the predicted number of pressure or other loading cycles exceeds 10^8 over the design life than in the following eqs. (20) and (21), then N shall be set to 10^8.

For the design of nonleaking defects, paras. 3.4.4 and 3.4.5, the composite allowable strain in both circumferential and axial directions, ϵ_c and ϵ_a, eq. (9), shall be derated by the factor, f_c, where f_c is given by

$$f_c = \sqrt{\left[R_c^2 + \frac{1}{2.888\text{Log}\,(N) - 7.108}\,(1-R_c^2)\right]} \tag{20}$$

For the design of leaking pipes (para. 3.4.7), the service factor, f, in eqs. (12) through (14) shall be replaced by

$$f = 0.333\sqrt{\left[R_c^2 + \frac{1}{2.888\text{Log}\,(N) - 7.108}\,(1-R_c^2)\right]} \tag{21}$$

These equations are intended for cyclic internal pressure loading only, but may be applied with caution to axial loads, provided they remain tensile, i.e., the equations are not applicable for reversible loading.

3.4.10.3 Fire Performance. The requirements for fire performance shall be identified in the risk assessment. Flame spread and smoke generation shall also be considered in the assessment. Due account shall be taken of the response of the Repair System [pipe (substrate) and the repair laminate]. In many cases additional fire protection will not be necessary, as the damaged original pipe may still be able to perform satisfactorily during the short duration of a fire event.

Strategies for achieving fire performance include the following:

(a) application of additional wraps of repair laminate material such that enough basic composite will remain intact for the duration of the fire event

(b) application of intumescent external coatings

(c) application of intumescent and other energy absorbent materials within the repair laminate

(d) use of polymer formulations with specific fire-retardant properties.

Further details of fire performance and fire mitigation methods are contained in ISO 14692.

3.4.10.4 Electrical Conductivity. For repairs to metallic substrates, it is likely that the properties of the substrate will satisfy electrical conductivity requirements.

Where the substrate is insulating, e.g., GRP, and electrical conductivity requirements are specified, the electrical conductivity properties of the Repair System should be measured to ensure that the original characteristics of the substrate are restored.

Electrical conductivity testing details are contained in ISO 14692.

3.4.10.5 Environmental Compatibility. The suitability for use of the Repair System in the service environment shall be based on the following considerations. The service environment is the environment that will contact the repair laminate. It may be either the external or internal environment. When required by the service environment, the Repair System shall be protected from UV exposure (e.g., sunlight), water, and damaging chemicals, either as an inherent characteristic of the Repair System or by the application of coating or mechanical barrier.

The qualification of the Repair System (para. 3.2) shall ensure that the Repair System is compatible with aqueous and hydrocarbon environments at the qualification temperature. In general, thermoset polymers are compatible with a wide range of environments but consideration needs to be given when the environment is strongly acidic (pH < 3.5), strongly alkaline (pH > 11), or is a strong solvent, e.g., methanol, toluene in concentration greater than 25%.

When the compatibility of the Repair System is unknown, then the repair laminate supplier shall provide one of the following to demonstrate compatibility:

(a) environmental compatibility data from the polymer supplier, demonstrating that the environment is no more aggressive than aqueous or hydrocarbon environments at the design temperature

(b) if no compatibility data from the polymer supplier is available, then specific environmental testing is required. Results from tests according to one of the following test procedures, ASTM D 543, ASTM C 581, ASTM D 3681, ISO 10952 or equivalent, comparing the exposure of the specific environment and aqueous environment to the repair laminate at the design temperature

shall be performed. The Repair System shall be considered compatible to the specific environment if the test results from the specific environment are no worse than for the aqueous environment.

When erosion is the cause of the degradation process of the substrate material and the repair laminate is in contact with the eroding medium, then the repair laminate may suffer material loss. The Repair System supplier shall demonstrate that despite this potential loss of laminate material, the Repair System should survive for the specified repair lifetime.

3.4.10.6 Cathodic Disbondment. For repairs to pipes that are cathodically protected, it may be required to demonstrate that the repair will not disbond due to the cathodic protection system.

ASTM G8 shall be used to demonstrate that the repair will not be susceptible to disbondment under an imposed electrical current.

3.4.11 Design Output. The outputs of the design calculations of the repair laminate are the following:

(a) repair thickness (number of wraps), n

(b) total axial repair length, L

The design thickness of the repair shall be expressed as number of wraps for installation purposes

$$n = \frac{t_{\text{repair}}}{t_{\text{layer}}} \tag{22}$$

where n shall be not less than 2.

3.5 Approval

Designs of repairs according to this Article shall be authorized by a Professional Engineer (or international equivalent) or shall be undertaken by a technically competent person acceptable to the owner.

3.6 Requalification

Where there has been a change to the Repair System, then the testing specified in the relevant paras. 3.6.1 and 3.6.2 shall be completed.

If the modified Repair System is found to be of lower performance than the original system, then it shall be treated as a new system and validated according to the requirements of this Article.

If the modified Repair System is found to be of higher performance than the original system, then it may be treated as a new system and validated according to the requirements of this Article or the data from the original Repair System may be used.

3.6.1 For Type A Repairs

(a) Testing specified in sections II-2 and II-4 of Mandatory Appendix II.

(b) Where the Repair System has been validated according to section II-6 of Mandatory Appendix II, the system shall be subject to the survival testing specified in para. V-2.1 of Mandatory Appendix V.

3.6.2 For Type B Repairs

(a) Testing specified in sections II-2 and II-3 of Mandatory Appendix II.

(b) Testing specified in section II-5 of Mandatory Appendix II.

NOTE: Only three tests are required and results shall be compared with γ_{LCL} of the original Repair System.

4 FABRICATION (INSTALLATION)

4.1 General

The repair thickness to be installed shall be expressed as the number of wraps to be applied (based on the minimum thickness per wrap determined during validation); see para. 3.4.11.

4.2 Materials of Construction

The materials of construction shall be those for which the qualification and design has been completed.

4.3 Storage Conditions

Storage of material shall comply with the supplier's instructions. The MSDS shall be retained for reference. It should be noted that the materials used will need to be stored and controlled according to national safety regulations (e.g., OSHA or COSHH).

4.4 Method Statements

Installation of a Repair System shall be covered by a method statement, which describes each of the main procedures to be carried out.

Input to the method statement comes from the following:

(a) risk assessment (supplied by owner)

(b) working conditions (supplied by owner)

(c) design information

(1) plant operating conditions, layout, etc. (supplied by owner)

(2) design of repair (supplied by Repair System supplier)

(d) materials information for Repair System (supplied by Repair System supplier)

Typically the method statement includes information specified in paras. 4.4.1 through 4.4.5.

4.4.1 Health and Safety

(a) List of materials to be handled, including copies of MSDS.

(b) National safety regulations (e.g., OSHA, COSHH) assessment for process.

(c) Details of personal protective measures to be adopted.

(d) List of hazards associated with equipment to be repaired and equipment in the vicinity of the repair site with protective measures.

4.4.2 Repair Design

(a) Details of laminate lay-up, including number of wraps, repair area covered, and orientation of individual layers of reinforcement (this may be presented as a written description or a drawing incorporating standard details such as overlap and taper and taper length information).

(b) Details of surface preparation procedure, including method of application, equipment to be used, and inspection method.

(c) Details of in-fill required to achieve a smooth outer profile prior to the application of the repair laminate.

4.4.3 Repair Application

(a) Details of time limitations between stages of the repair, e.g., between surface preparation and lamination.

(b) Details of lay-up procedure including if the repair laminate is to be applied in stages.

(c) Details of curing procedure including postcuring if necessary.

4.4.4 Quality Assurance

(a) Details of hold/inspection points during the Repair System application (para. 4.6 and Mandatory Appendix VIII).

(b) Details of any materials tests to be carried out (if specified by owner or the Repair System supplier).

(c) Details of any pressure system tests to be carried out (see section 6).

4.4.5 Environmental. Information on disposal of unused materials and waste.

4.5 Installer Qualifications

Personnel involved in the installation of a Repair System shall be trained and qualified according to Mandatory Appendix VII.

4.6 Installation Guidance

Repair System suppliers shall provide full installation instructions. These instructions shall include (where appropriate)

(a) acceptable environmental conditions of site at time of repair

(b) material storage

(c) surface preparation

(d) polymer mixing

(e) laminate lay-up

(f) laminate consolidation

(g) cure

(h) key hold points

Further details of these requirements can be found in Mandatory Appendix VIII.

The key hold points that may be observed during a repair are summarized in Table 5.

The results of the tests on the repair laminate shall be compared with the qualification data. Acceptance values of the test results shall be provided by the polymer system supplier prior to Repair System installation.

Table 5 Hold Points During Installation (08)

Hold Point	Checked By
Method statement	Installer
Materials preparation ☐ reinforcement ☐ polymer	Installer
Surface preparation ☐ inspection	Installer or supervisor
Filler profile	Installer
Stage check on reinforcement lay-up	Installer
Tests on repair laminate ☐ cure (hardness) ☐ thickness ☐ dimensions ☐ external inspection (see Table 6)	Installer or supervisor
Pressure test	Inspection authority

4.7 Live Repairs

Repairs to nonleaking, live piping systems are possible, provided that the associated hazards are fully considered in the risk assessment for the operation. This should include any hazards to and from surrounding equipment in addition to the pipe being repaired.

The tensile (radial) stresses induced into the adhesive bond as a result of the thermal contraction differences between the composite and the pipe upon the removal of live loads are negligible.

5 EXAMINATION

5.1 Introduction

This section provides guidance on the post-installation/operational issues of Repair Systems. The installation of a Repair System will not affect any internal inspections that may be carried out.

The main issues for nondestructive examination of the Repair System are

(a) the inspection of the repair (composite) laminate

(b) the inspection of the bond quality between the repair laminate and the substrate

(c) the inspection of the substrate

The basic structure of a composite repair in this context is considered in Fig. 1.

5.2 Defects Within the Repair System

The Repair System supplier shall provide post-installation visual inspection criteria. Guidance on

Fig. 1 Schematic of a Repair System and Location of Defects

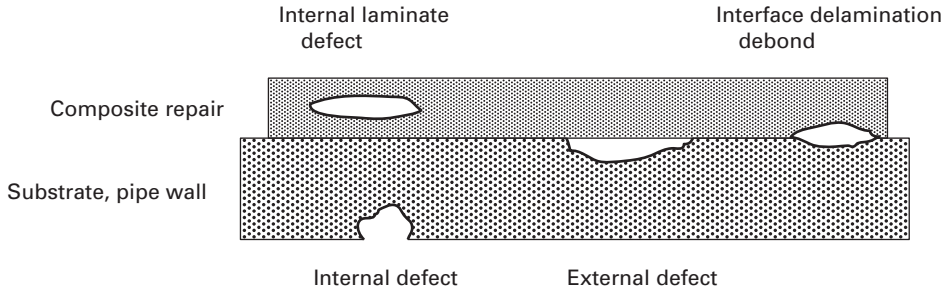

defects and allowable limits that are likely to be of importance are given in Table 6. The installer shall take care to ensure that these defects are not formed during application of the Repair System.

(08) **5.3 Repair of Defects Within the Repair System**

Dry areas in the polymer-rich surface layer may be repaired by abrading and cleaning the affected area and then wetting out with more polymer.

Repairs containing defects that exceed the limits in Table 6 shall be removed in their entirety and a new repair installed. However, on agreement with the owner, local removal of the damaged area and reapplication of the Repair System materials to this area are allowable if the Repair System supplier can demonstrate that this will restore the full performance of the repair.

5.4 Inspection Methods

Refer to Repair System supplier for guidance on methods for inspecting the Repair System.

5.5 Repair System Replacement Strategy

The maintenance and replacement strategy for Repair Systems will be a function of the type of original defect in the pipe.

For above-ground piping systems, visual inspection of the repair laminate for defects in accordance with Table 6 is recommended as part of the maintenance strategy. The frequency of inspection should be determined in accordance with the risk assessment. If defects are located, then further assessment will be required.

If the assessment determines that replacement is required, then replacement options include

(a) removal of the repair (e.g., through ultra-high pressure water jetting) and replacement

(b) repair the repair laminate. In this case the damaged repair laminate shall be considered as the defect for design purposes and a new repair designed according to para. 3.4

(c) localized repair of the damaged area, para. 5.3

5.5.1 External Defects. For external defects, it is assumed that further deterioration of the defect is stopped on application of the repair laminate. Therefore, the maintenance strategy will be to ensure that the repair laminate remains intact, i.e., the repair laminate is not damaged or delaminated in part from the substrate.

5.5.2 Internal or Through-Wall Defects. For internal corrosion or through-wall defects, further deterioration or growth of the defect may continue despite application of the repair laminate. Therefore, in addition to the requirements set out in para. 5.5.1, the maintenance strategy should ensure that the internal defect does not grow to a size greater than assumed in the design of the repair or that the repair laminate does not delaminate from the substrate pipe.

The frequency of inspection should be determined in accordance with the risk assessment.

If the design assessment determines that the Repair System is no longer fit for purpose, then maintenance/repair options should be considered, as described in ASME PCC-2, but a (composite) Repair System may still be the best solution.

6 SYSTEM PRESSURE TESTING

System pressure testing, if required, shall be specified by the owner.

All repairs shall be cured in accordance with the Repair System supplier instructions before pressure testing.

A service test of not less than 1.0 times the operating pressure is recommended for a period of at least 60 min over which any changes in pressure and temperature shall be recorded. Any signs of leakage or indication of repair laminate failure shall be cause for rejection of the repair.

If the test pressure exceeds the pressure for which the Repair System has been designed, then this higher pressure shall be considered as a separate design case. For the purposes of the calculation, the test condition may be treated as an occasional load.

7 REFERENCES

7.1 Referenced Codes and Standards

The following is a list of publications referenced in this Article.

(08)

Table 6 Defect Type and Allowable Limits for the Composite Wrap

Repair Section	Defect	Allowable Limits
Repair material and substrate pipe prior to repair application	Check that substrate material are those specified by design	
	Changes in geometry	Repair area to be free of sharp changes in geometry [all radii > 5 mm (0.2 in.)], or sharp geometry to be faired-in
	Surface preparation	In accordance with Repair System specification Axial extent to be in accordance with design
	Surface temperature	In accordance with repair design
	Defect	Dimensions do not exceed those for which the repair has been designed Defect nature to be that for which the repair has been designed
	Location of repair	Axial extent and positioning to be in accordance with design
Interface	Delamination	Tap test may indicate presence of debonding None at ends of repair
Polymer-rich layer	Cracks	None (check adhesive fillets)
	Foreign matter, blisters, and pits	Maximum 10 mm (0.4 in.) in width, 2.5 mm (0.1 in.) in height
	Wrinkles	No step changes in thickness greater than 2.5 mm (0.1 in.) in height
	Pin holes	None deeper than polymer-rich layer
	Polymer color	Uniform
	Dry spots	None
Composite laminate	Fiber orientation	As specified in design
	Unimpregnated/dry fiber	None
	Exposed, cut edges/fibers	None
	Foreign matter	None
	Axial extent and positioning of the repair	As specified in the design Does not extend beyond prepared surface

API 579/ASME FFS-1, Fitness-For-Service (latest edition)
ASME B31.1-2007, Power Piping
ASME B31.3-2006, Process Piping
ASME B31.4-2006, Pipeline Transportation Systems for Liquid Hydrocarbons and Other Liquids
ASME B31.8-2007, Gas Transmission and Distribution Piping Systems
ASME B31G-1991, Manual: Determining Remaining Strength of Corroded Pipelines: Supplement to B31 Code — Pressure Piping
ASME PCC-2–2008, Repair of Pressure Equipment and Piping
Publisher: The American Society of Mechanical Engineers (ASME), Three Park Avenue, New York, NY 10016-5990; Order Department: 22 Law Drive, P.O. Box 2300, Fairfield, NJ 07007-2300

ASTM C 581-2003, Standard Practice for Determining Chemical Resistance of Thermosetting Resins Used in Glass-Reinforced Structures Intended for Liquid Service
ASTM D 543-1995, Standard Practices for Evaluating the Resistance of Plastics to Chemical Reagents
ASTM D 648-2004, Standard Test Method for Deflection Temperature of Plastics Under Flexural Load in the Edgewise Position
ASTM D 790-2003, Standard Test Method for Flexural Properties of Unreinforced and Reinforced Plastics and Insulating Materials

ASTM D 1598-2002, Test Method for the Time to Failure of Plastic Pipe Under Constant Internal Pressure
ASTM D 1599-1999, Test Method for Short Time Hydraulic Failure Pressure of Plastic Pipe, Tubing and Fittings
ASTM D 2240-2005, Standard Test Method for Rubber Property — Durometer Hardness
ASTM D 2583-1995, Standard Test Method for Indentation Hardness of Rigid Plastics by Means of a Barcol Impressor
ASTM D 2992-2001, Practice for Obtaining Hydrostatic or Pressure Design Basis for Glass Fiber Reinforced Thermosetting Resin Pipe and Fittings
ASTM D 3039-2000, Standard Test Method for Tensile Properties of Polymer Matrix Composite Materials
ASTM D 3165-2000, Standard Test Method for Strength Properties of Adhesives in Shear by Tension Loading of Single-Lap-Joint Laminated Assemblies
ASTM D 3681-2001, Standard Test Method for Chemical Resistance of Fiberglass (Glass-Fiber-Reinforced Thermosetting Resin) Pipe in a Deflected Condition
ASTM D 5379-1998, Standard Test Method for Shear Properties of Composite Materials by the V-Notched Beam Method
ASTM D 6604-2000, Standard Practice for Glass Transition Temperatures of Hydrocarbon Resins by Differential Scanning Calorimetry
ASTM E 831-2003, Standard Test Method for Linear Thermal Expansion of Solid Materials by Thermomechanical Analysis
ASTM E 1640-1999, Standard Test Method for Assignment of the Glass Transition Temperature By Dynamic Mechanical Analysis
ASTM G 8-1996, Standard Test Methods for Cathodic Disbonding of Pipeline Coatings

Publisher: American Society for Testing and Materials (ASTM International), 100 Barr Harbor Drive, P.O. Box C700, West Conshohocken, PA 19428-2959

BS EN 59-1977, Measurement of Hardness by Means of a Barcol Impressor
BS EN 1465-1995, Determination of Tensile Lap Shear Strength of Rigid to Rigid Bonded Assemblies
BS 7910-1999, Guide on Methods for Assessing the Acceptability of Flaws in Metallic Structures

Publisher: British Standards Institution, Inc. (BSI), 12110 Sunset Hills Road, Reston, VA 20190-5902

ISO 75-1993, Plastics — Determination of Temperature of Deflection Under Load
ISO 178-2001, Plastics — Determination of Flexural Properties
ISO 527-1993, Plastics — Determination of Tensile Properties
ISO 868-2003, Plastics and Ebonite — Determination of Indentation Hardness by Means of a Durometer (Shore Hardness)
ISO 8501-1988, Preparation of Steel Substrates Before Application of Paints and Related Products
ISO 8502-1992, Tests for the Assessment of Steel Cleanliness
ISO 8503-1988, Surface Roughness Characteristics of Blast Cleaned Steel Substrates
ISO 8504-2000, Surface Preparation Methods
ISO 10952-1999, Plastics Piping Systems — Glass-Reinforced Thermosetting Plastics (GRP) Pipes and Fittings — Determination of the Resistance to Chemical Attack From the Inside of a Section in a Deflected Condition
ISO 11357-2-1999, Plastics — Differential Scanning Calorimetry (DSC) — Part 2: Determination of Glass Transition Temperature
ISO 11359-2-1999, Plastics — Thermomechanical analysis (TMA) — Part 2: Determination of Coefficient of linear Thermal Expansion and Glass Transition Temperature
ISO 13623-2000, Petroleum and Natural Gas Industries — Pipeline Transportation Systems
ISO 14692-2002, Petroleum and Natural Gas Industries — Glass Reinforced Plastic (GRP) Piping
ISO 15649-2001, Petroleum and Natural Gas Industries — Piping

Publisher: International Organization for Standardization (ISO), 1 ch. de la Voie-Creuse, Case postale 56, CH-1211, Genève 20, Switzerland/Suisse

7.2 Related Codes and Standards

The following are related codes and standards. Unless otherwise specified, the most recent standard (latest edition) available shall be used.

ASME Boiler and Pressure Vessel Code, Section III, Division 1, Subsection ND (ND-3611.2), Piping Design/General Requirements/Acceptability/Stress Limits
ASME Boiler and Pressure Vessel Code, Section III, Division 1, Subsection ND [ND-3672.6(a)], Piping Design/General Requirements/Expansion and Flexibility/Stresses/Stress Range
ASME B31.5, Refrigeration Piping
ASME B31.9, Building Services
ASME B31.11, Slurry Transportation Piping Systems

Publisher: The American Society of Mechanical Engineers (ASME), Three Park Avenue, New York, NY 10016-5990; Order Department: 22 Law Drive, P.O. Box 2300, Fairfield, NJ 07007-2300

ASTM D 638, Standard Test Method for Tensile Properties of Plastics
ASTM D 696, Standard Test Method for Coefficient of Linear Thermal Expansion of Plastics Between –30°C and 30°C With Vitreous Silica Dilatometer
ASTM D 903, Standard Test Method for Peel or Stripping Strength of Adhesive Bonds

ASTM D 1763, Standard Specification for Epoxy Resins
ASTM D 2105, Standard Test Method for Longitudinal Tensile Properties of "Fiberglass" (Glass-Fiber-Reinforced Thermosetting-Resin) Pipe and Tube
ASTM D 2344, Standard Test Method for Short-Beam Strength of Polymer Matrix Composite Materials and Their Laminates
ASTM D 2837, Standard Test Method for Obtaining Hydrostatic Design Basis for Thermoplastic Pipe Materials
ASTM D 3846, Standard Test Method for In-Plane Shear Strength of Reinforced Plastics
ASTM F 412, Standard Terminology Relating to Plastic Piping Systems
Publisher: American Society for Testing and Materials (ASTM International), 100 Barr Harbor Drive, P.O. Box C700, West Conshohocken, PA 19428-2959

AWWA C-150/A21.51, Standard for Thickness Design of Ductile Iron Pipe
AWWA C-151/A21.51, Standard for Ductile Iron Pipe, Centrifugally Cast, for Water or Other Liquids
AWWA C-200, Standard for Steel Water Pipe 6 in. and Larger
AWWA M-11, Steel Pipe — A Guide for Design and Installation
Publisher: American Water Works Association (AWWA), 6666 West Quincy Avenue, Denver, CO 80235

BS 2782: Part 10, Method 1001, Measurement of Hardness by Means of a Barcol Impresser
Publisher: British Standards Institution, Inc. (BSI), 12110 Sunset Hills Road, Reston, VA 20190-5902

CSWIP, CSWIP-GRP-1-96 and CSWIP-GRP-2-96, as per ISO 8503
NTS-GRP-FJS/01 and NTS-GRP-INSP/01, NTS GRP Guidelines for Approval Schemes for Fitters, Joiners, Supervisors and Inspectors
ISO EN 13121, GRP tanks and vessels for use above ground
ISO 14129, Fibre-Reinforced Plastic Composites — Determination of the In-Plane Shear Stress/Shear Strain Response, Including the In-Plane Shear Modulus and Strength, by the Plus or Minus 45 degree Tension Test Method
ISO 15310, Fibre-Reinforced Plastic Composites — Determination of the In-Plane Shear Modulus by the Plate Twist Method
Publisher: International Organization for Standardization (ISO), 1 ch. de la Voie-Creuse, Case postale 56, CH-1211, Genève 20, Switzerland/Suisse

--`,``,`,,,```````,`,`,`,,,-`-`,,`,,`,`,,`---

Article 4.1, Mandatory Appendix I
Design Data Sheet

This Appendix provides an example of a design data sheet as referenced in para. 3.3. of Article 4.1.

Pipe Repair Data Sheet

This pipe repair data sheet will form the basis of the client's scope of work and be used in the preparation of a design solution. One sheet shall be completed for each type of repair required.

Where possible, (digital) photographs of the defective areas should be provided.

Customer Details			
Contact			
Company			
Address			
Postal code		Country	
Telephone			
Fax			
E-mail			
Job reference			

Pipe Details				
Pipe supports	e.g., buried, hangers, pipe racks, sleepers, thrust blocks			
Accessibility				
Location	e.g., inside, outside			
Quantity				
Pipe identification				
Pipe reference				
Pipe specification				
Material / grade				
External diameter				
Wall thickness				
Medium				
Operating temperature	Minimum		Maximum	
Pipe coating (existing)				

Risk Assessment

Repair Requirements (see para. 1.2)	
Repair type	e.g., A or B
Required repair lifetime	
Other data	

Pipe loading	Operating	Design	Test	Comments
Pressure				
Axial				
Bending moment				
Other				

GENERAL NOTES:
(a) For any original design calculations, piping isometrics shall be appended to this data sheet.
(b) Loads shall be defined as either "Sustained" or "Occasional" in the Comments column.

Pipe Repair Data Sheet (Cont'd)

Details of Defect Area

Attach drawings of pipe system, inspection reports, etc., where available. Indicate any access restrictions and proximity to other equipment.

Repair specification				
Type of defect				
Nature of defect				
Current size	Area		Depth	
Projected size	Area		Depth	
Cause	Corrosion		Erosion	
Effect	External		Internal	
	Perforated			
MAWP				

GENERAL NOTE: MAWP is the maximum allowable working pressure as defined in ASME B31G, API 579, BS 7910, or other calculation method.

Anticipated Conditions During Implementation of Repair

Pipe temperature	Minimum		Maximum	
Ambient temperature	Minimum		Maximum	
Humidity				
External environment				
Constraints				

Facilities to be Provided by Client / Installation (surface prep., etc.)

Other Information

GENERAL NOTE: This should include any remarks on previous repairs, fire protection requirements, available design calculations, etc.

Prepared by: _____ Date: _____

Article 4.1, Mandatory Appendix II
Qualification Data

II-1 INTRODUCTION

This Appendix describes the qualification data that the Repair System supplier shall provide to be in compliance with this Article.

It is a requirement that all qualification tests are carried out using the same substrate material, surface preparation, repair laminate, filler material, adhesive, and application method (see para. 1.1 of Article 4.1).

Qualification testing shall be completed in accordance with the latest version of the test standard. Updates to the test standards shall not require qualification testing to be repeated.

II-2 DATA FOR REPAIR LAMINATE

The following data are required:

(a) ply or layer thickness of the (composite) repair laminate material.

(b) tensile modulus, strain to failure and strength in the circumferential direction determined by test according to Table 1 of Article 4.1.

(c) tensile modulus, strain to failure and strength in the axial direction determined by test according to Table 1.

(d) Poisson's ratio in the circumferential direction (i.e., load direction circumferential, contraction axial) determined by test according to Table 1 of Article 4.1.

(e) shear modulus determined by test according to Table 1. The test specimen geometry shall be as shown in Fig. II-1.

(f) alternatively, the shear modulus of the polymer matrix may be used.

Fig. II-1 Test Specimen Geometry

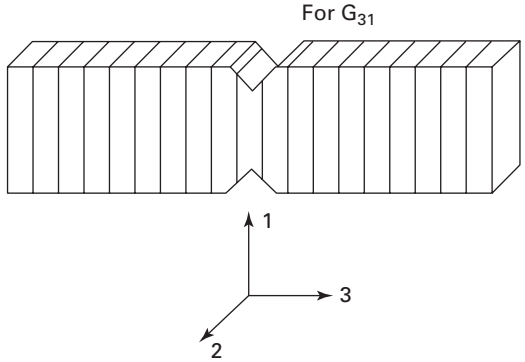

(g) Barcol hardness or Shore hardness determined by test according to Table 1 of Article 4.1.

(h) glass transition temperature (T_g) or heat distortion temperature (HDT) for the polymer system subjected to the same thermal history as repairs applied on site, determined by test according to Table 1 of Article 4.1.

(i) thermal expansion coefficient in the axial and circumferential directions determined by measurement (Table 1 of Article 4.1), calculation, or by reference to relevant technical literature.

II-3 DATA FOR REPAIR/PIPE INTERFACE

The objectives of the following tests are not to produce data for use in design. The intent is to demonstrate that an adhesive bond can be achieved of adequate strength and durability with the repair laminate and surface preparation method. It should be noted that short-term strength measurements are not necessarily a good indicator of long-term performance.

The following lap shear tests shall be carried out:

(a) Lap shear strength determined by test according to Table 1. This short-term test shall be used to determine the average shear strength or the locus of failure (repair laminate remaining on a minimum of 30% of the bonded area). Minimum average lap shear strength of 4 MN/m^2 (580 psi) shall be demonstrated for metal substrates. Alternatively, it shall be demonstrated that the adhesive bond is stronger than the lap shear strength of the repair laminate by assessing the surface of the substrate material used in a lap shear specimen after testing.

(b) Where evidence of long-term durability of the adhesive bond between the repair laminate and the substrate is required and performance-based testing has not been carried out to provide data for design (see para. 3.4.5 of Article 4.1), a long-term lap shear strength determined by test according to Table 1 shall be performed. This test shall be carried out following immersion in water (or other relevant medium) at the design temperature [minimum 40°C (104°F)] for 1,000 hr. The average lap shear strength determined from this test shall be at least 30% of the values from the short-term lap shear tests determined above.

(c) For service above 100°C (212°F), the following lap shear tests shall be performed: **(08)**

(1) after immersion in water at a minimum of 90°C (194°F) for 1,000 hr and

(2) after exposure in air at the required service temperature (T_m) for 1,000 hr

The average lap shear strength determined from these tests shall be at least 30% of the values from the short-term lap shear tests determined above.

II-4 ADDITIONAL REQUIREMENTS FOR STRUCTURAL REPAIRS TO NONLEAKING PIPES (TYPE A DESIGN CASE)

The objective of the referenced test is not to produce data for use in design. The intent is to demonstrate that for a severe defect, adequate strength of the Repair System can be achieved. The pipe spool survival test (Mandatory Appendix III of Article 4.1) shall be completed. This test need only be completed on one substrate.

II-5 ADDITIONAL REQUIREMENTS FOR LEAKING PIPES (TYPE B DESIGN CASE)

The following data shall be determined:

(a) bending modulus for the (composite) repair laminate determined by test according to Table 1. Alternatively, the tensile modulus for the laminate may be used as a conservative estimate for the value in bending.

(b) fracture toughness parameter γ determined by test according to Mandatory Appendix V of Article 4.1.

(c) impact performance determined by test according to Mandatory Appendix VI of Article 4.1.

II-6 PERFORMANCE TESTING (OPTIONAL QUALIFICATION TESTS)

The Repair System supplier may carry out performance testing to determine design allowables in accordance with Mandatory Appendix V of Article 4.1. The following design allowables are determined by either of the following:

(a) long-term strength, either from 1,000 hr survival test or regression testing.

(b) long-term strain to failure from representative repair laminate regression testing.

Article 4.1, Mandatory Appendix III
Short-Term Pipe Spool Survival Test

III-1 INTRODUCTION

This Appendix describes the test method to be used to demonstrate that a Type A defect can be repaired using the Repair System.

The purpose of this test is to confirm the Repair System has acceptable interlaminar shear and bond strength. It demonstrates the integrity of a structural repair up to the yield level of the original pipe.

(08) III-2 METHOD

The following test shall be completed using a steel pipe of at least 150 mm (6 in.) diameter, and minimum length of six times the diameter in addition to the length of the repair. The steel pipe shall have a minimum SMYS of $235 * 10^6$ N/m^2 (35,000 psi), e.g., ASTM A 106 Grade B or international equivalent.

The Repair System supplier can select the depth of the defect, i.e., percentage of wall loss. The Repair System shall be qualified only for defect depths up to this chosen depth.

A defect shall be machined in the pipe to a depth equivalent to the wall loss for which the Repair System is being qualified. The defect shall have a length, l, of a minimum of one-half of the pipe diameter along the axial direction of the pipe spool, and a width, w, of one-fourth of the pipe diameter around the hoop direction of the pipe spool. A radius may be machined outside the edge of the defect, but the dimensions of machined area shall not exceed $2l$ nor $2w$, as shown in Fig. III-1. To avoid stress concentrations, the interior and exterior corners should be machined with a radius. The edge of the repair shall be at least three times the pipe diameter away from the ends of the pipe spool.

The test pressure of the spool, P_f, shall be determined by calculation using eq. (III-1)

$$P_f = \frac{2ts_a}{D} \quad \text{(III-1)}$$

A repair laminate shall be applied over the defect in the test spool and shall survive a test to the pressure P_f.

The thickness of the repair shall be calculated using eq. (III-2), where t_s is the remaining wall thickness of the pipe spool at the defect and s_c is the characteristic tensile strength of the composite repair in the hoop direction. Measurement of s_c shall be in accordance with ASTM D 3039 or an equivalent standard.

$$t_{\text{repair}} = \frac{1}{s_c}\left(\frac{P_f D}{2} - s_a t_s\right) \quad \text{(III-2)}$$

The repaired spool shall be pressurized to P_f. The minimum time to reach P_f shall be 30 sec.

Qualification requires the repaired pipe to survive loading to P_f and show no visual signs of degradation when inspected in accordance with Table 6 of Article 4.1.

III-3 REPORT

A report shall be prepared giving the test conditions, depth of wall loss for which the repair has been qualified, details of the Repair System, and the pressure test result.

Fig. III-1 Defect Dimensions

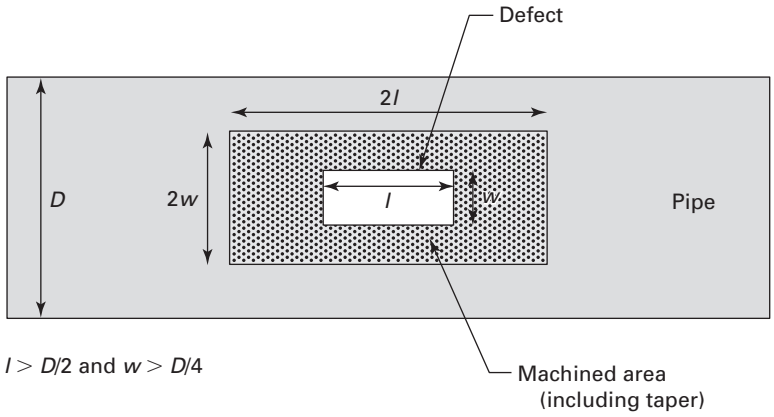

Article 4.1, Mandatory Appendix IV
Measurement of γ for Leaking Defect Calculation

IV-1 INTRODUCTION

This Appendix describes the test method for measurement of the toughness parameter for the repair laminate-to-substrate (pipe) interface, γ, to be used in eqs. (12) through (14) in para. 3.4.6 of Article 4.1.

IV-2 METHOD

Test plates or sections of pipe of minimum diameter 100 mm (4 in.) and minimum thickness of 3 mm (0.12 in.) shall be used. To represent typical defects, circular holes shall be drilled through the wall thickness of the substrate and the repair laminate applied. All samples shall be laminated with the holes in the 6 o'clock orientation.

The pipe section used for the preparation for the test specimen shall be appropriate for the anticipated failure pressure of the repair. Yielding of the pipe prior to failure shall not take place.

Internal pressure shall be applied and the value at which the repair begins to leak shall be recorded.

The test shall be carried out at the temperature at which the repair is to be used.

Pressurization rate shall be in accordance with ASTM D 1599.

A minimum of nine tests shall be carried out covering a minimum of three different hole sizes, typically of diameter 10 mm (0.4 in.), 15 mm (0.6 in.), and 25 mm (1 in.). A maximum of one-third of the tests shall be done for any one hole size.

For the larger diameters, the flaw may be simulated by using a smaller hole and a circular polymeric release film of the appropriate diameter placed over the hole prior to application of the repair (films shall be pierced before application of the repair).

Failures should take the form of disbondment of the repair laminate from the substrate (pipe) followed by leaking from the edge of the repair laminate. At small hole sizes, failure can occur through weeping of the test fluid through the thickness of the repair laminate or through yielding of the substrate (pipe). In this event the tests shall be repeated with a larger hole size. All failure points shall relate to the disbondment failure mechanism.

IV-3 CALCULATION OF γ

The value of γ shall be calculated by fitting eq. (12) in para. 3.4.6 (Article 4.1) to the data.

The following procedure shall be followed:

$A(d_i)$ = the function of defect size, d_i, and repair laminate properties of observation, i, where $i = 1, n$

n = the number of observed data points [$A(d_i)$, P_i)]

P_i = the pressure at failure of observation i, where $i = 1, n$

$A(d_i)$ is defined as

$$P_i = A(d_i)\sqrt{\gamma_i}$$

where

$$A(d_i) = \sqrt{\frac{1}{\frac{(1-\nu^2)}{E}\left(\frac{3}{512t_i^3}d_i^4 + \frac{1}{\pi}d_i\right) + \frac{3}{64Gt_i}d_i^2}}$$

where t_i is the repair thickness of data point i.

The mean energy release rate, γ_{mean}, is calculated from

$$\gamma_{\text{mean}} = \left[\frac{\sum_{i=1}^{n} A(d_i)P_i}{\sum_{i=1}^{n} A(d_i)^2}\right]^2 \qquad \text{(IV-1)}$$

The lower confidence limit of the energy release rate, γ_{LCL}, is calculated from

$$\gamma_{\text{LCL}} = \left[\frac{\sum_{i=1}^{n} A(d_i)P_i}{\sum_{i=1}^{n} A(d_i)^2} - t_\nu\sigma\sqrt{\frac{1}{\sum_{i=1}^{n} A(d_i)^2}}\right]^2 \qquad \text{(IV-2)}$$

Table IV-1 Student's *t* Value for Double Sided 0.025 Level of Significance

Number of Variables, *n*	Degrees of Freedom, *n*-2	Student's *t* (0.025)
5	3	3.163
6	4	2.969
7	5	2.841
8	6	2.752
9	7	2.685
10	8	2.634
11	9	2.593
12	10	2.560
13	11	2.533
14	12	2.510
15	13	2.490
16	14	2.473
17	15	2.458
18	16	2.445

where σ is the variance of measurement of pressure and is given by

$$\sigma = \sqrt{\frac{\sum_{i=1}^{n}\left[P_i - A(d_i)\sqrt{\gamma_{\text{mean}}}\right]^2}{(n-2)}} \quad \text{(IV-3)}$$

and where t_v is the Student's t value and is based on a two-sided 0.025 level of significance, i.e., 95% lower confidence limit. Values of t_v are given as a function of number of variables, n, in Table IV-1.

The value of γ calculated by eq. (IV-2), γ_{LCL} shall be used in eqs. (12) through (14) of Article 4.1.

IV-4 REPORT

A report shall be prepared giving the test conditions, details of the Repair System, the individual data points, and the derived value of γ_{LCL}.

Article 4.1, Mandatory Appendix V
Measurement of Performance Test Data

V-1 INTRODUCTION

This Appendix describes the test methods for measurement of the design allowables to be used in para. 3.4.5 of Article 4.1. The test method alternatives are one of the following:

(a) survival testing where the Repair System is subjected to a period of sustained load for 1,000 hr for measurement of the long-term strength

(b) regression testing based on a series of tests on the Repair System over different time periods and extrapolation to design life for measurement of the long-term strength

(c) coupon testing based on regression testing of representative coupons followed by confirmation of long-term coupon test results with survival testing for measurement of the long-term strain

All tests shall be carried out at the maximum temperature at which the Repair System is to be used in service.

V-2 METHODS

V-2.1 Survival Testing

(08)

Sections of pipe of minimum diameter 100 mm (4 in.) and minimum thickness of 3 mm (0.12 in.) shall be used and the Repair System applied.

A value of internal pressure shall be applied (defined by the Repair System supplier) and sustained for 1,000 hr. If any deterioration of the repair laminate in the form of cracking, delamination, or leaking occurs, the Repair System will have failed the test. Three identical tests shall be performed and repair qualification is only possible if all three tests survive.

The 95% lower confidence long-term stress is calculated using

$$s_{lt} = \frac{P_{\text{test}}\, DE_c}{2(E_c\, t_{\min} + E_s\, t_s)} \tag{V-1}$$

If yielding of the substrate pipe does occur then the 95% lower confidence long-term stress, s_{lt} (MPa), is calculated using

(08)

$$s_{lt} = \frac{1}{t_{\text{repair}}}\left(\frac{P_f D}{2} - s_a t_s\right) \tag{V-2}$$

Further guidance on survival pressure testing procedures may be obtained from ASTM D 1598.

V-2.2 Regression Testing

Sections of pipe of minimum diameter 100 mm (4 in.) and minimum thickness of 3 mm (0.12 in.) shall be used and the Repair System applied.

A series of test specimens shall be subject to sustained pressures of different values. The time at which the repair laminate shows signs of deterioration defined as cracking, delamination, or leaking shall be recorded. The results shall be plotted (log/log) and the required pressure determined by a regression analysis using the 95% lower confidence limit and extrapolation to design life. The conversion from pressure to stress within the repair laminate for each data point shall be according to

$$s = \frac{P_{\text{test}}\, DE_c}{2(E_c\, t_{\min} + E_s\, t_s)} \tag{V-3}$$

If yielding of the substrate pipe does occur then the 95% lower confidence long-term stress, s_{lt} (MPa), is calculated using

$$s_{lt} = \frac{1}{t_{\text{repair}}}\left(\frac{P_f D}{2} - s_a t_s\right) \tag{V-4}$$

At least 18 results are required in order to carry out the regression analysis. ASTM D 2992 provides further guidance on the long-term testing of composite materials and ISO 14692 provides guidance on the analysis of the data required to calculate s_{lt}.

V-2.3 Representative Coupon Testing

Representative coupons of the repair laminate shall be made up and tested in a comparable manner to the actual Repair System laminate. "Representative" implies same laminate constituents, volume fraction, and fiber orientation. "Comparable loading" implies coupons shall be loaded identically as the in-service repair laminate (e.g., uniaxial tension or biaxial tension).

At least 18 coupons shall be tested under constant load to failure (data points in terms of number and length of time of testing according to ASTM D 2992, with the statistical analysis of data according to ISO 14692).

Output of these coupon tests is the regression gradient, G, in terms of either log (stress or strain) against log (time).

To determine the long-term failure stress or strain of the Repair System, five medium term tests (according to ASTM D 1598) shall be performed on sections of pipe of minimum diameter 100 mm (4 in.) and minimum

thickness of 3 mm (0.12 in.). In these tests, the pressure is fixed and the time to failure recorded. It is recommended to select a test pressure so that failure occurs after about 1,000 hr.

The lower confidence limit (in terms of time) for these five tests is calculated according to the mean failure time minus two standard deviations. The long-term design strength (or strain) of the Repair System is the extrapolation of the lower confidence limit to the design lifetime using the measured regression gradient from the coupon tests.

Further guidance on survival pressure testing procedures may be obtained from ASTM D 1598.

Further guidance on long-term testing and data interpretation may be obtained from ISO 14692.

V-3 REPORT

A report shall be prepared giving the test conditions, details of the Repair System, the individual data points, and the derived performance design data.

Article 4.1, Mandatory Appendix VI
Measurement of Impact Performance

VI-1 INTRODUCTION

This Appendix describes the test method for measurement impact performance. The Repair System supplier shall demonstrate that the repair is capable of withstanding the impact from a low velocity 5 J (44.3 in.-lb) impact representative of a dropped tool.

VI-2 METHODS

An identical test specimen to one of the nine from Mandatory Appendix IV (Article 4.1) shall be used.

The repair shall be subject to a 0.5 kg (1.1 lb) weight with a 12 mm (0.5 in.) hemispherical indentor dropped from a height of 1 m (39 in.). The pipe shall be supported so that the hole is in the 12 o'clock orientation and the weight shall strike the repair at the position of the hole in the pipe. The pipe shall be empty for the duration of the impact test.

The impacted specimen shall be subject to a pressure test as described in Mandatory Appendix IV (Article 4.1) . The γ value of the test shall be calculated according to Mandatory Appendix IV. The calculated γ value shall be not less than γ_{LCL}.

VI-3 REPORT

A report shall be prepared giving the test conditions, details of the Repair System, the individual data points, and the derived performance.

Article 4.1, Mandatory Appendix VII
Installer Qualification

(08) VII-1 INTRODUCTION

The repair of pipe using composite laminates differs considerably from other repair techniques and the quality of the installation depends strongly on satisfactory craftsmanship. Training and certification of personnel is therefore a key element of a successful repair. This Appendix outlines the minimum requirements for training, qualification, and approval of installers and supervisors for the specific Repair System.

Courses and training shall be arranged by or with the assistance of the Repair System supplier.

VII-2 TRAINING

The basic course shall give a theoretical and practical introduction to the most important elements in the installation of a composite repair.

VII-2.1 Coursework (Installer)

The course shall include training in
(a) definition of a Repair System
(b) terminology, types of repair
(c) hazards associated with pressurized systems
(d) health, safety, and environment
(e) surface preparation
(f) material preparation
(g) material application
(h) control of repair conditions
(i) quality control

VII-2.2 Coursework (Supervisor)

The supervisor candidate shall be a qualified installer and complete the following additional training:
(a) supervisor's duties and responsibilities
(b) evaluation methods used in repair design
(c) health and safety
(d) installation checklist and hold points
(e) inspection of repairs

VII-2.3 Installer-Specific Qualification

Installers shall be qualified for each specific Repair System through practical tests for Type A and/or Type B.

All specific approval tests shall be carried out in accordance with a written procedure, relevant to the specific Repair System and approved by the Repair System supplier.

VII-2.3.1 Type A. Repair shall be applied to a pipe of at least 100 mm (4 in.) diameter. Repair shall pass visual inspection completed in accordance with para. 5.2 of Article 4.1 witnessed by a supervisor or instructor.

VII-2.3.2 Type B. In addition to the requirements for Type A repairs, an identical test specimen to one of the nine from Mandatory Appendix IV (Article 4.1) shall be prepared. The specimen shall be subject to a pressure test as described in Mandatory Appendix IV (see Article 5.1 for guidance). The γ value of the test shall be calculated according to Mandatory Appendix IV. The calculated γ value shall be not less than γ_{LCL}.

VII-3 TRAINING RECORDS

At the completion of an installer or supervisor course, a successful candidate shall be issued with a certificate providing details of the Repair System of concern.

The employer of the Repair System installer shall keep a record of the completed training.

VII-4 VALIDITY

The type-specific qualification shall be valid for a period of 1 year.

The qualification may be renewed if the applicant provides evidence of successful performance of repairs installed during the previous year.

If the installer has not performed a repair in the last year then they shall be requalified prior to applying further repairs.

Article 4.1, Mandatory Appendix VIII
Installation

VIII-1 INTRODUCTION

Repair System suppliers shall provide full installation instructions.

The requirements given in the following sections are intended to complement those given by Repair System suppliers and specify the key operations necessary for a successful repair. In the event of conflict, the Repair System supplier should be contacted for clarification.

Full instructions for each repair situation shall be given in the method statement prepared in each instance.

VIII-2 SURFACE PREPARATION

The surface preparation shall extend at least over the whole surface onto which the repair laminate is to be applied and be in accordance with the specific Repair System.

Assessment of the prepared surface for roughness and cleanliness can be obtained from ISO 8501, ISO 8502, ISO 8503, and ISO 8504.

Any chemicals used for surface preparation shall be within the recommended shelf life, freshly mixed (where appropriate).

The time period between surface preparation and initial coating/laminate application should be as short as possible, to avoid formation of flash corrosion.

Prepared surfaces shall be protected from contamination prior to the application of the repair laminate. Deterioration of the prepared surface shall be cause for rejection and the surface preparation procedure repeated.

The specified surface preparation technique shall not be replaced by another, without explicit guidance from the Repair System supplier, who shall have qualified the alternative as part of a different Repair System.

VIII-3 LAMINATE LAY-UP

Where appropriate, these details shall include

(a) in-fill compounds

(b) primer application

(08) *(c)* polymer/adhesive preparation

(d) reinforcement orientation

(e) overlaps between neighboring wraps

(f) overlaps between individual layers

(g) consolidation of the layers

(h) finishing layer/coating

(i) taper details (see para. 3.4.8 of Article 4.1)

VIII-4 CURE (08)

Since the cure of a repair laminate is strongly influenced by temperature and the correct mixing of polymer constituents prior to lamination, the limits set by Repair System supplier shall not be exceeded without approval from the Repair System supplier.

Where elevated temperatures are required for curing, the temperature shall be monitored throughout the curing process and adhere to Repair System supplier's guidance.

The time for full cure is dependent on the type of polymer used in the repair and ambient conditions. The extent of cure achieved during installation shall be the same as that assumed in the design.

If the pipe pressure has been reduced prior to repair, then the repaired pipe shall not be returned to its normal operating pressure until satisfactory cure has been achieved.

VIII-5 DOCUMENTATION

It is good practice to keep a record for each repair and retain it for the repair life. A unique identifier should be assigned to each repair. The records that should be kept include the following:

(a) Design Records

(1) layers and orientation of reinforcement

(2) preparation procedure

(3) cure procedure

(4) postcure

(5) number of layers

(6) axial extent of repair

(7) design data (Mandatory Appendix I of Article 4.1) and calculations

(8) location of repair

(b) Material Records

(1) repair supplier

(2) polymer type and quantity (08)

(3) reinforcement type and quantity

(4) batch numbers for materials

(c) Quality Control Records

(1) repair reference number

(2) visual inspection report (see acceptable defects listed in Table 6 of Article 4.1)

(3) thickness measurement

(4) repair dimensions

(5) personnel completing the installation

(6) Barcol or Shore hardness measurement (if specified)

(7) T_g measurement (if specified)

(d) Service Inspection. Details of (future) service inspection intervals.

Article 4.1, Mandatory Appendix IX
Glossary of Terms and Acronyms

(08) IX-1 GLOSSARY OF TERMS

anisotropic: exhibiting different properties in different directions.

Barcol hardness: measure of surface hardness using a surface impresser.

composite: a thermoset plastic (polymer) that is reinforced by fibers.

continuous (fiber): unbroken fiber lengths throughout the structure.

cure or curing: setting of a thermosetting resin, e.g., polyester, epoxy, by an irreversible chemical reaction.

delamination: separation of layers within a composite laminate or between the laminate and the host pipe.

differential scanning calorimetry (DSC): method of determining the glass transition temperature of a thermosetting resin.

disbondment: separation of the laminate from the substrate (pipe).

glass transition temperature: temperature at which a resin undergoes a marked change in physical properties.

hardener: component added to an epoxy resin to affect cure.

heat distortion temperature: temperature at which a standard test bar deflects a specified amount under a given load.

in-fill material: material used to repair external surface imperfections prior to the application of composite wrap.

laminate: the part of a Repair System that is the composite. Most composites considered in this document are composed of discrete lamina or layers, which are wrapped or stacked, one on top of the other. This stacked construction is the "laminate."

leak: this does not refer to a fluid leaking through a hole or breach in the pipe. Rather, this refers to a condition of a pipe (substrate) wall that could or does allow the contents of a pipe to make contact with and act directly upon the (composite) repair laminate.

owner: the company or entity that owns or is responsible for the pipe substrate being repaired.

pipeline: pipe with components (e.g., bends, flanges, valves) subject to the same design conditions and typically used to transport fluids between plants, usually buried.

pipework: interconnected piping subject to the same set or sets of design conditions.

piping: assemblies of piping components (e.g., pipe, fittings, flanges, gaskets, bolting, valves) used to convey fluids within a plant, often above ground but sometimes buried.

ply: a single wrap or layer (lamina) of a repair laminate.

postcure: additional elevated temperature cure.

reinforcement: a high strength fiber imbedded in the plastic resin, resulting in mechanical properties superior to those of the base resin.

resin system: all of the components that make up the matrix (plastic or polymer) portion of a composite. Often this is a resin, filler(s), pigment, mechanical property modifiers, and catalyst or hardener.

risk: a term encompassing what can happen (scenario), its likelihood (probability), and its level of damage (consequences).

Shore hardness: measure of surface hardness using a surface impresser or durometer.

substrate: the original pipe or pipe fittings to be modified.

supplier: the company or entity taking responsibility for testing and qualifying a Repair System; usually the manufacturer, but possibly a provider of private-relabeled product.

thermoset resin: these are plastic resins that cannot be resoftened following polymerization.

IX-2 GLOSSARY OF ACRONYMS

API: American Petroleum Institute

ASME: The American Society of Mechanical Engineers

ASTM: American Society for Testing and Materials

AWWA: American Water Works Association

BS (BSI): British Standards Institute

CFRP: Carbon Fiber Reinforced Plastic

COSHH: Control of Substances Hazardous to Health Regulations

CSWIP: Certification Scheme for Welding Inspection Personnel

DSC: Differential Scanning Calorimetry

FRP: Fiber Reinforced Plastic

GRP: Glass Reinforced Plastic

HDT: Heat Distortion Temperature

ISO: International Standards Organization

MAWP: Maximum Allowable Working Pressure

MSDS: Materials Safety Data Sheets

NDT: Nondestructive Testing

OSHA: Occupational Safety and Health Act

SMYS: Specified Minimum Yield Strength

--`,``,`,,,`````````,`,`,`,`,,,,-`-`,,`,,`,`,,`,---

Article 4.2
Nonmetallic Composite Repair Systems for Pipelines and Pipework: Low-Risk Applications

(08)

1 DESCRIPTION

(08) 1.1 Scope

1.1.1 Repair Requirements. This Article provides the requirements for the repair of low-risk piping using a qualified Repair System.

1.1.2 Definition of Repair System. The Repair System is defined as the combination of the following elements for which qualification testing has been completed:

(a) substrate (pipe)
(b) surface preparation
(c) composite material (repair laminate)
(d) filler material
(e) adhesive
(f) application method
(g) curing protocol

1.1.3 Allowed Materials. The composite materials allowed for the Repair System are engineering fiber (e.g., carbon, glass) reinforcements in a thermoset polymer matrix (e.g., polyester, polyurethane, phenolic, vinyl ester, or epoxy).

(08) 1.2 Applicability

1.2.1 Example Applications. This Article addresses the repair of piping originally designed in accordance with a variety of pipe standards, including ASME B31.1, ASME B31.3, AWWA C200, AWWA C300, AWWA C301, AWWA C302, AWWA C303, AWWA C400, AWWA C402, ISO 15649, and ISO 13623.

1.2.2 Definition of Low Risk. Low-risk applications, for the purposes of this Article, are defined as those applications where all of the following apply:

(a) nonhazardous fluids (e.g., aqueous fluids)
(b) piping systems not critical to the safety of workers (e.g., fire suppression systems)
(c) non-IDLH fluids
(d) less than 150 psig (1 MN/m^2)
(e) less than 120°F (50°C)
(f) above 0°F (–20°C)
(g) less than 78 in. (2 m) piping diameter
(h) the leaking defect size, d, and design pressure, P, satisfy the following relationship:
(1) $P\sqrt{d} < 150$ psig $(\text{in.})^{0.5}$
(2) $p\sqrt{d} < 0.5$ $MN/m^{1.5}$
(3) the defect size shall be limited to $d \le 0.25 \times D$

1.2.3 Applicable Defects. The following types of defect may be repaired:

(a) external corrosion
(b) external damage
(c) internal corrosion and/or erosion
(d) leaks
(e) manufacturing or fabrication defects

1.3 Risk Assessment

A determination shall be made as to whether the repair is low risk, as defined in para. 1.2. The risk assessment should define the acceptable life of the repair. An assessment of the risks associated with the defect and repair method should be completed in line with the relevant industry best practice.

NOTE: See Article 4.1 for guidance in risk assessment.

The information and data describing any hazards shall be included in the risk assessment to be used on site.

1.4 Repair Life (08)

The repair life is the useful service period of the Repair System for a specific application, which may be affected by external and environmental exposures, active internal corrosion/erosion, and external mechanical influences. The repair life shall be defined by the risk assessment.

2 LIMITATIONS

2.1 Additional Requirements (08)

Part 1 of this Standard contains additional requirements and limitations. This Article shall be used in conjunction with Part 1.

2.2 Qualification of Repair System (08)

The use of this Article is limited to those Repair Systems for which the qualification testing described in Mandatory Appendix II has been completed. Any change to any element of the Repair System (para. 1.1) constitutes a different and therefore new Repair System. This new Repair System shall require qualification as described in Mandatory Appendix II. See also para. 3.2.

2.3 Installation

The installation procedures shall be those used in the Repair System qualification. If the installation procedures are not those used in the Repair System qualification, then the repair is not in compliance with this Article.

(08) 2.4 Loading

If other loads are present within the repair area, in addition to internal pressure, then Article 4.1 shall be used.

3 DESIGN

(08) 3.1 Symbols

These are the symbols used throughout this Article.

D = external pipe diameter, m (in.)
d = diameter (or diameter of the equivalent circle) of the defect or leaking region, m (in.)
d_f = design factor
E_c = tensile modulus for the composite laminate in the circumferential direction determined by test according to Table 1, N/m^2 (psi)
HDT = heat distortion temperature, °C (°F)
L = total axial repair length, m (in.)
L_{defect} = axial length of the defect, mm (in.)
L_{over} = overlap length, m (in.)
L_{taper} = taper length, m (in.)
n = number of wraps as determined by the relevant repair design case
n_A = minimum number of wraps for Type A repairs
n_B = minimum number of wraps for Type B repairs
n_C = minimum number of wraps for Type C repairs
n_D = minimum number of wraps for Type D repairs
P = repair design pressure, N/m^2 (psi)
S_{wa} = wrap axial strength per ply per meter (per inch) in tension
S_{wh} = wrap hoop strength per ply per meter (per inch) in tension
T_d = design temperature of Repair System, °C (°F)
T_g = glass transition temperature, °C (°F)
t = wall thickness of substrate, m (in.)

(08) 3.2 Repair System Qualification Data

(a) Qualification of the Repair System shall be completed in accordance with Table 1 and Mandatory Appendix II. Equivalent national or international published test methods are also acceptable.

(b) Materials performance and test data shall be measured by a certified or nationally accredited test facility, or certified by a registered Professional Engineer (or international equivalent).

(c) The Repair System supplier shall specify the following parameters:

(1) pipe material restrictions
(2) surface preparation
(3) repair laminate (polymer matrix and fiber reinforcement)
(4) reinforcement orientation
(5) overlaps between neighboring wraps
(6) overlaps between individual layers
(7) filler material (dimensional restoration), if used
(8) adhesive/primer, if used
(9) application instructions

(d) Any change in the above parameters to the Repair System shall constitute a new Repair System and require qualification.

3.3 Additional Required Data (08)

(a) The following data should be provided for each repair:

(1) lifetime requirements/expectation of the repair service life
(2) required design and operating pressures/temperatures
(3) expected future service conditions
(4) piping line identity
(5) description of the piping, including material specification and pipe wall thickness

(b) The data used in the design shall be recorded. Mandatory Appendix I may be utilized.

3.4 Calculations (08)

(a) The design of the repair laminate shall be carried out using the requirements in the following sections. There are four design cases:

(1) Type A Design Case. For pipes that are not leaking (requiring structural reinforcement only). This shall be calculated for all repairs.

(2) Type B Design Case. This shall be calculated for pipes that are leaking.

(3) Type C Design Case. This shall be calculated for pipe tees that are not leaking.

(4) Type D Design Case. This shall be calculated for pipe tees that are leaking.

(b) A pipe shall be considered to be leaking if the wall thickness at any point of the affected area is expected to be less than 1 mm (0.04 in.) at the end of the repair life. This should take account of active internal corrosion where applicable.

(c) For elbows, bends, reducers, and flanges, the repair thickness calculated in paras. 3.4.1 and 3.4.2 shall be used.

Table 1 Repair System Required Material and Performance Properties (08)

	Material Property	International Test Method	ASTM Test Method
Mechanical properties	Tensile properties, S_{wa}, S_{wh}	ISO 527	ASTM D 3039
	Tensile modulus, E_c	. . .	
	Glass transition temperature of polymer, T_g	ISO 11357-2	ASTM D 6604, ASTM E 1640, or ASTM E 831
	Heat distortion temperature (HDT)	ISO 75-1Ae or ISO 75-1Be	ASTM D 648
	Barcol hardness	BS EN 59	ASTM D 2583
	Shore hardness	ISO 868	ASTM D 2240
Adhesion strength	Lap shear	BS EN 1465	ASTM D 3165
	Leak sealing performance (optional)	Mandatory Appendix III	

3.4.1 Type A Design Case

(a) For hoop stresses due to internal pressure, the minimum number of wraps, n_A, is given by

$$n_A = \frac{PD}{2d_f S_{wh}} \quad (1)$$

where d_f is set at 0.2 and S_{wh} is taken from Table 1.

(b) For any cases where the substrate wall thickness has been reduced by 50% or more, then the following calculation shall be made:

$$n_A = \frac{PD}{4d_f S_{wa}} \quad (2)$$

(c) The design repair laminate thickness, $t_{\min}$, shall be the greater of the values determined.

3.4.2 Type B Design Case. The number of wraps, n_B, applied shall be that qualified in Mandatory Appendix III.

3.4.3 Type C Design Case. For tees, the number of layers, n_C, shall be $2n_A$. For pipe tee joints, the diameter of the larger pipe shall be used in the calculation.

3.4.4 Type D Design Case. For tees that are leaking, the number of layers, n_D, shall be the greater of n_C and n_B.

3.4.5 Axial Length of Repair

(a) The design thickness of the repair laminate shall extend beyond the damaged region in the pipe by L_{over}

$$L_{\text{over}} = 2.5\sqrt{Dt/2} \quad (3)$$

(b) L_{over} shall be at least 0.05 m (2 in.).

(c) The ends of the repair may be tapered. A minimum taper length, L_{taper}, of approximately 5:1 (run:rise) is recommended.

(d) The total axial length of the repair is given by

$$L = 2L_{\text{over}} + L_{\text{defect}} + 2L_{\text{taper}} \quad (4)$$

(e) The repair shall be centered over the defect.

3.4.6 Environmental Compatibility. The suitability of the Repair System for use in the service environment specified by the owner shall be determined.

3.4.7 Design Output

(a) The outputs of the design calculations of the repair laminate are the following:

(1) the number of wraps, n, shall be determined by the appropriate design case specified in para. 3.4 (n shall not be less than 2)

(2) total axial repair length, L

(b) The Repair System installer shall be provided with the following information:

(1) details of laminate lay-up, including number of wraps, repair area to be covered, and orientation of individual layers of reinforcement (this may be presented as a written description or a drawing incorporating standard details such as overlap and taper)

(2) details of surface preparation procedure, including method of application, equipment to be used, and inspection method

(3) details of in-fill required to achieve a smooth outer profile prior to the application of the repair laminate

(4) details of cure protocol

3.5 Approval

Designs of repairs according to this Article shall be undertaken by a technically competent person acceptable to the owner.

(08) **Table 2 Hold Points During Installation**

Hold Point
Materials preparation ☐ reinforcement ☐ polymer
Surface preparation ☐ inspection
Filler profile
Stage check on reinforcement lay-up
Inspection of repair laminate ☐ cure (hardness) ☐ number of wraps (thickness) ☐ dimensions and position ☐ external inspection (see Table 3)
Pressure test

3.6 Requalification

Where there has been a change to the Repair System, then the relevant testing specified in para. 3.2 shall be completed.

4 FABRICATION (INSTALLATION)

(08) 4.1 Storage Conditions

(a) Storage of material should comply with the supplier's instructions.

(b) The MSDS should be retained for reference.

(c) It should be noted that the materials used will need to be stored and controlled according to national safety regulations (e.g., OSHA or COSHH).

4.2 Installer Qualifications

Personnel involved in the installation of a Repair System shall be trained and qualified for that Repair System according to Mandatory Appendix IV.

(08) 4.3 Installation Guidance

(a) Repair System suppliers shall provide installation instructions. These instructions shall include (where appropriate)

(1) acceptable environmental conditions of site at time of repair

(2) material storage

(3) surface preparation

(4) polymer mixing

(5) laminate lay-up

(6) laminate consolidation

(7) cure

(8) key hold points

(b) Further details of these requirements can be found in Mandatory Appendix V.

(c) The key hold points that may be observed during a repair are summarized in Table 2.

(d) The results from the inspection of the repair laminate shall meet the acceptance criteria of the design output.

4.4 Live Repairs

Repairs to nonleaking, live piping systems are possible, provided that the associated hazards are fully considered in the risk assessment for the operation. This should include any hazards to and from surrounding equipment in addition to the pipe being repaired.

5 EXAMINATION

5.1 Introduction (08)

(a) This section provides guidance on the postinstallation/operational issues of Repair Systems. The installation of a Repair System will not adversely affect any internal inspections that may be carried out.

(b) The inspection of the Repair System may include

(1) cure (hardness)

(2) number of wraps (thickness)

(3) dimensions and position

(4) examination for defects (see Table 3)

(c) The basic structure of a composite repair in this context is illustrated in Fig. 1 of Article 4.1.

5.2 Defects Within the Repair System (08)

(a) The Repair System supplier shall provide postinstallation visual examination criteria.

(b) Guidance on defects and allowable limits that are likely to be of importance are given in Table 3.

(c) The installer shall take care to ensure that these defects are not formed during application of the Repair System.

5.3 Repair of Defects Within the Repair System

(a) Corrective actions shall be as specified by the Repair System supplier to address the defects identified in Table 3.

(b) Repairs containing defects that exceed the limits in Table 3 should be removed and reapplied. However, on agreement with the owner, local removal of the damaged area and reapplication of the Repair System materials to this area are allowable if the Repair System supplier can demonstrate that this will restore the full performance of the repair.

6 SYSTEM PRESSURE TESTING (08)

(a) System pressure testing, if required, shall be specified by the owner.

(1) A service test of the operating pressure is recommended.

(2) See Article 5.1 for guidance on pressure testing.

(3) Any signs of leakage or indication of repair laminate failure shall be cause for rejection of the repair.

Table 3 Defect Type and Allowable Limits for the Composite Wrap (08)

Repair Section	Defect	Allowable Limits
Repair materials and substrate pipe prior to repair application	Check that the materials are those specified by the Design Output	. . .
	Changes in geometry	Repair area to be free of sharp changes in geometry [all radii < 5 mm (0.2 in.)], or sharp geometry to be smoothed. (Filler/contour material)
	Surface preparation	In accordance with repair system specification Axial extent to be in accordance with design
	Surface temperature	In accordance with repair design
	Defect	Dimensions do not exceed those for which the repair has been designed Defect nature to be that for which the repair has been designed
	Location of repair	Axial extent and positioning to be in accordance with design
Interface	Delamination/disbonding	Tap test may indicate presence of delamination or disbonding None exist at ends of repair
Polymer-rich layer	Cracks	None (check adhesive fillets)
	Foreign matter, blisters, and pits	Maximum 10 mm (0.4 in.) in width, 2.5 mm (0.1 in.) in height
	Wrinkles	No step changes in thickness greater than 2.5 mm (0.1 in.) in height
	Pin holes	None deeper than polymer-rich layer
	Polymer color	Uniform
	Dry spots	None
Composite laminate	Fiber orientation	As specified in design
	Unimpregnated/dry fiber	None
	Exposed, cut edges/ fibers	None
	Foreign matter	None
	Axial extent and positioning of the repair	As specified in the design Does not extend beyond prepared surface

(b) All repairs shall be cured in accordance with the Repair System supplier instructions before pressure testing.

(c) If the test pressure exceeds the pressure for which the Repair System has been designed, then the repair shall be redesigned for this higher pressure.

(08) 7 REFERENCES

ANSI/API RP 579-2000, Fitness-For-Service (Recommended Practice)

Publisher: American National Standards Institute (ANSI), 25 West 43rd Street, New York, NY 10036

ASME B31.1-2004, Power Piping

ASME B31.3-2004, Process Piping

ASME B31G-1991, Manual: Determining Remaining Strength of Corroded Pipelines: Supplement To B31 Code-Pressure Piping

Publisher: The American Society of Mechanical Engineers (ASME), Three Park Avenue, New York, NY 10016-5990; Order Department: 22 Law Drive, P.O. Box 2300, Fairfield, NJ 07007-2300

ASTM D 648-2004, Standard Test Method for Deflection Temperature of Plastics Under Flexural Load in the Edgewise Position

ASTM D 1599-1999, Test method for short time hydraulic failure pressure of plastic pipe, tubing and fittings

ASTM D 2240-2005, Standard Test Method for Rubber Property — Durometer Hardness

ASTM D 2583-1995, Standard test method for indentation hardness of rigid plastics by means of a Barcol impressor
ASTM D 3039-2000, Standard Test Method for Tensile Properties of Polymer Matrix Composite Materials
ASTM D 3165-2000, Standard Test Method for Strength Properties of Adhesives in Shear by Tension Loading of Single-Lap-Joint Laminated Assemblies
ASTM D 3681-2001, Standard Test Method for Chemical Resistance of Fiberglass (Glass-Fiber-Reinforced Thermosetting Resin) Pipe in a Deflected Condition
ASTM D 5379-1998, Standard Test Method for Shear Properties of Composite Materials by the V-Notched Beam Method
ASTM D 6604-2000, Standard Practice for glass transition temperatures of Hydrocarbon Resins by Differential Scanning Calorimetry
ASTM E 831-2003, Standard Test Method for Linear Thermal Expansion of Solid Materials by Thermomechanical Analysis
ASTM E 1640-1999, Standard Test Method for Assignment of the Glass Transition Temperature by Dynamic Mechanical Analysis
Publisher: ASTM International (ASTM), 100 Barr Harbor Drive, P.O. Box C700, West Conshohocken, PA 19428-2959

AWWA C200-97, Standard for Steel Water Pipe 6 in. (150 mm) and Larger
AWWA C300-04, Reinforced Concrete Pressure Pipe, Steel-Cylinder Type
AWWA C301-07, Prestressed Concrete Pressure Pipe, Steel-Cylinder Type
AWWA C302-04, Reinforced Concrete Pressure Pipe, Noncylinder Type
AWWA C303-02, Concrete Pressure Pipe, Bar-Wrapped, Steel Cylinder Type
AWWA C400-03, Asbestos-Cement Pressure Pipe 4 in.–16 in. (100 mm–400 mm) for Water Distribution Systems
AWWA C402-05, Asbestos-Cement Transmission Pipe, 18 in. Through 42 in. (450 mm Through 1 050 mm) for Water Supply Service
Publisher: American Water Works Association (AWWA), 6666 West Quuincy Avenue, Denver, CO 80235

BS EN 59-1977, Measurement of hardness by means of a Barcol impressor
BS EN 1465-1995, Determination of tensile lap shear strength of rigid to rigid bonded assemblies
BS 7910-1999, Guide on methods for assessing the acceptability of flaws in metallic structures
Publisher: British Standards Institute, Inc. (BSI), 12110 Sunset Hills Road, Reston, VA 20190-5902

ISO 75-1993, Plastics — Determination of temperature of deflection under load
ISO 178-2001, Plastics — Determination of flexural properties.
ISO 527-1993, Plastics — Determination of tensile properties
ISO 868-2003, Plastics and ebonite — Determination of indentation hardness by means of a durometer (Shore hardness)
ISO 8501-1988, Preparation of steel substrates before application of paints and related products
ISO 8502-1992, Tests for the assessment of steel cleanliness
ISO 8503-1988, Surface roughness characteristics of blast cleaned steel substrates
ISO 8504-2000, Surface preparation methods
ISO 10952-1999, Plastics piping systems — Glass-reinforced thermosetting plastics (GRP) pipes and fittings — Determination of the resistance to chemical attack from the inside of a section in a deflected condition
ISO 11357-2-1999, Plastics — Differential scanning calorimetry (DSC) — Part 2: Determination of glass transition temperature
ISO 11359-2-1999, Plastics — Thermomechanical analysis (TMA) — Part 2: Determination of coefficient of linear thermal expansion and glass transition temperature
ISO 13623-2000, Petroleum and natural gas industries — Pipeline transportation systems
ISO 15649-2001, Petroleum and natural gas industries — Piping
Publisher: International Organization for Standardization (ISO), 1 ch. de la Voie-Creuse, Case postale 56, CH-1211, Genève 20, Switzerland/Suisse

Article 4.2, Mandatory Appendix I
Repair Data Sheet

Begins on next page.

Repair Data Sheet

Job Reference	

Pipe Details				
Pipe identification				
Material / grade				
External diameter				
Wall thickness				
Pipe contents				
Operating temperature	Minimum		Maximum	
Pressure	Operating	Design	Test	Comments

Repair Requirements (see para. 1.2 of Article 4.2)	
Repair type	e.g., A, B, C, or D
Repair design pressure, *P*	

Repair Specification				
Nature of defect				
Defect length, *l*				
Defect size used in design, *d*	Diameter		Depth	
Cause of defect	Corrosion		Erosion	
Location	External		Internal	
	Leaking	Y or N		
Position on pipe (e.g., 6 o'clock)				

Conditions During Implementation of Repair	
Pipe temperature	
Ambient temperature	
Humidity	
External environment	
Constraints	

Details of Repair Applied	
Number of layers	
Length of repair	

Repair Materials	
Manufacturer	
Batch number	
Installed date	
Installed time	

Installer			
Name		Certification No.	

Prepared by: _____ Date: _____

--`,`,`,,,`````,,`,`,`,`,,,,-`-`,,`,,`,`,,`---

Article 4.2, Mandatory Appendix II
Qualification Data

(08) II-1 INTRODUCTION

(a) This Appendix describes the qualification data that the Repair System supplier shall provide to be in compliance with this Article.

(b) It is a requirement that all qualification tests are carried out using the same substrate material, surface preparation, repair laminate, filler material, adhesive, and application method (see para. 1.1 of Article 4.2). Any change to the Repair System shall constitute a new Repair System and require qualification.

(c) Qualification testing shall be completed in accordance with the latest version of the test standard. Updates to the test standards shall not require qualification testing to be repeated.

(08) II-2 DATA FOR REPAIR LAMINATE

The following data are required:

(a) tensile strength per layer per meter (or strength per layer per inch) in tension for hoop direction (S_{wh}) and axial direction (S_{wa})

(b) minimum tensile modulus (E_c) of 7×10^9 N/m^2 (1,000,000 psi)

(c) Barcol hardness or Shore hardness determined by test according to Table 1 of Article 4.2 (if applicable)

(d) heat distortion temperature (HDT) or the glass transition temperature (T_g) for the Repair System shall be greater than 60°C (140°F), determined by test according to Table 1 (Article 4.2)

II-3 DATA FOR REPAIR/PIPE INTERFACE (08)

(a) The lap shear test shall be carried out according to Table 1.

(1) This short-term test shall be used to determine the average shear strength or the locus of failure.

(2) Minimum average lap shear strength of 4 MN/m^2 (580 psi), or failure of the substrate, shall be demonstrated for all substrates.

(b) Alternatively, it shall be demonstrated that the adhesive bond is stronger than the shear strength of the repair laminate or substrate by assessing the surface of the substrate material used in a lap shear specimen after testing.

II-4 ADDITIONAL REQUIREMENTS FOR LEAKING PIPES

The following data are required: Demonstration of leak sealing capacity, determined by test according to Mandatory Appendix III.

Article 4.2, Mandatory Appendix III
Validation for Repair of Leaking Pipe

(08) III-1 INTRODUCTION

This Appendix describes the testing required to validate the Repair System for repair of leaks.

(a) The Repair System shall be validated after the successful completion of three tests on one pipe size.

(b) Only one pipe size needs to be qualified.

(08) III-2 METHOD

(a) Sections of pipe of minimum diameter 100 mm (4 in.) and minimum thickness of 3 mm (0.12 in.) shall be used. A circular hole of 25 mm (1 in.) diameter shall be drilled through the wall thickness of the substrate and the repair laminate applied. All samples should be laminated with the holes in the 6 o'clock orientation. Three tests shall be completed at ambient temperature.

(b) The repair thickness applied shall be calculated using eq. (2) for a pressure of 1 MN/m^2 (150 psig). At least two layers of reinforcing material shall be used for the test. The tested repair thickness shall be defined as n_B.

(c) Internal pressure shall be applied and the repair shall not fail below 3 MN/m^2 (450 psig). Pressurization rate shall be in accordance with ASTM D 1599.

III-3 REPORT

A report shall be prepared giving the test conditions, details of the Repair System, and the individual data points (final pressure of test).

Article 4.2, Mandatory Appendix IV
Installer Qualification

(08) IV-1 INTRODUCTION

(a) The repair of pipe using composite laminates differs considerably from other repair techniques and the quality of the installation depends strongly on satisfactory craftsmanship. Training and certification of personnel is therefore a key element of a successful repair. This Appendix outlines the minimum requirements for training, qualification, and approval of installers and supervisors.

(b) Training should be arranged by or with the assistance of the Repair System supplier or other qualified training expert.

IV-2 TRAINING

Training shall give a theoretical and practical introduction to the most important elements in the installation of the Repair System.

IV-2.1 Installer

Training shall include the following:
(a) definition of a Repair System
(b) terminology, types of repair
(c) hazards associated with pressurized systems
(d) health, safety, and environment
(e) surface preparation
(f) material preparation
(g) material application
(h) control of repair conditions
(i) quality control

IV-2.2 Supervisor

The supervisor shall be a qualified installer and complete the following additional training:
(a) supervisor's duties and responsibilities
(b) evaluation methods used in repair design
(c) health and safety
(d) installation checklist and hold points
(e) inspection of repairs

IV-2.3 Installer-Specific Qualification (08)

(a) Installers shall be qualified for each specific Repair System through practical tests.

(b) All specific approval tests shall be carried out in accordance with relevant installation procedures.

(c) Repair shall pass visual inspection completed in accordance with para. 5.2 of Article 4.2 witnessed by a supervisor or instructor.

IV-3 RECORD OF TRAINING

The employer of the Repair System installers shall keep records of their training.

IV-4 QUALIFICATION PERIOD

The qualification shall remain valid for a period of 1 year following the installation of the last successful repair.

Article 4.2, Mandatory Appendix V
Installation

(08) V-1 INTRODUCTION

(a) Repair System suppliers shall provide full installation instructions.

(b) The requirements given in the following sections are intended to complement those given by Repair System suppliers and specify the key operations necessary for a successful repair.

(c) In the event of conflict, the Repair System supplier should be contacted for clarification.

(08) V-2 SURFACE PREPARATION

(a) The surface preparation shall extend at least over the whole surface onto which the repair laminate is to be applied and be in accordance with the specific Repair System.

(b) Assessment of the prepared surface for roughness and cleanliness should be provided by the Repair System supplier. The specified surface preparation technique shall not be replaced by another, without explicit guidance from the Repair System supplier, who shall have qualified the alternative as part of a different Repair System.

(c) Any chemicals used for surface preparation shall be within the recommended shelf life, freshly mixed (where appropriate).

(d) The time period between surface preparation and initial coating/laminate application should be as short as possible (e.g., to avoid formation of flash corrosion). Prepared surfaces shall be protected from contamination prior to the application of the repair laminate. Deterioration of the prepared surface should be cause for rejection and the surface preparation procedure repeated.

V-3 LAMINATE LAY-UP

The specific Repair System may need to include instructions for

(a) in-fill compounds

(b) primer application

(08) *(c)* polymer/adhesive preparation

(d) reinforcement orientation

(e) overlaps between neighboring wraps

(f) overlaps between individual layers

(g) consolidation of the layers

(h) finishing layer/coating

(i) taper details (see para. 3.4.5 of Article 4.2)

V-4 CURE (08)

(a) Since the cure of a repair laminate may be strongly influenced by temperature and the correct mixing of polymer constituents prior to lamination, the limits set by Repair System supplier shall not be exceeded without approval from the Repair System supplier.

(b) The time for full cure is dependent on the type of polymer used in the repair and ambient conditions.

(c) If the pipe pressure has been reduced prior to repair, then the repaired pipe shall not be returned to its normal operating pressure until satisfactory cure has been achieved.

V-5 DOCUMENTATION

It is good practice to keep a record for each repair and retain it for the repair life.

A unique identifier may be assigned to each repair. The records that may be kept include the following:

(a) Design Records

(1) layers and orientation of reinforcement

(2) preparation procedure

(3) cure protocol

(4) number of layers

(5) axial extent of repair

(6) design data (Mandatory Appendix I of Article 4.2) and calculations

(7) location of repair

(b) Material Records

(1) repair supplier

(2) polymer type and quantity (08)

(3) reinforcement type and quantity

(4) batch numbers for materials

(c) Quality Control Records

(1) repair reference number

(2) visual inspection report (see Table 3 of Article 4.2)

(3) thickness measurement

(4) repair dimensions

(5) personnel completing the installation

(6) Barcol or Shore hardness measurement (if specified)

Article 4.2, Mandatory Appendix VI
Glossary of Terms and Acronyms

(08) VI-1 GLOSSARY OF TERMS

Barcol hardness: measure of surface hardness using a surface impressor.

composite: a thermoset plastic (polymer) that is reinforced by fibers.

cure or curing: setting of a thermosetting polymer, e.g., polyester, epoxy, by an irreversible chemical reaction.

delamination: separation of layers within a composite laminate.

differential scanning calorimetry (DSC): method of determining the glass transition temperature of a thermosetting polymer.

disbondment: separation of the laminate from the substrate (pipe).

glass transition temperature: temperature at which a polymer undergoes a marked change in physical properties.

hardener: component added to a resin to affect cure of the thermoset polymer.

heat distortion temperature: temperature at which a standard test bar deflects a specified amount under a given load.

in-fill material: material used to repair external surface imperfections prior to the application of composite wrap.

laminate: the part of a Repair System that is the composite. Most composites considered in this document are composed of discrete lamina or layers, which are wrapped or stacked, one on top of the other. This stacked construction is the "laminate."

leak: this does not refer to a fluid leaking through a hole or breach in the pipe. Rather, this refers to a condition of a pipe (substrate) wall that could or does allow the contents of a pipe to make contact with and act directly upon the (composite) repair laminate.

owner: the company or entity that owns or is responsible for the pipe substrate being repaired.

pipeline: pipe with components (e.g., bends, flanges, valves) subject to the same design conditions and typically used to transport fluids between plants, usually buried.

pipework: interconnected piping subject to the same set or sets of design conditions.

piping: assemblies of piping components (e.g., pipe, fittings, flanges, gaskets, bolting, valves) used to convey fluids within a plant, often above ground but sometimes buried.

ply: a single wrap or layer (lamina) of a repair laminate.

polymer system: all of the components that make up the matrix (plastic or polymer) portion of a composite. Often this is a resin, filler(s), pigment, mechanical property modifiers, and catalyst or hardener.

reinforcement: a high strength fiber imbedded in the polymer, resulting in mechanical properties superior to those of the base polymer.

risk: a term encompassing what can happen (scenario), its likelihood (probability), and its level of damage (consequences).

Shore hardness: measure of surface hardness using a surface impressor or durometer.

substrate: the original pipe or pipe component to be modified.

supplier: the company or entity taking responsibility for testing and qualifying a Repair System; usually the manufacturer, but possibly a provider of private-relabeled product.

thermoset polymer: these are plastics that cannot be resoftened following polymerization.

VI-2 GLOSSARY OF ACRONYMS

ASME: The American Society of Mechanical Engineers

ASTM: American Society for Testing and Materials

BS (BSI): British Standards Institute

COSHH: Control of Substances Hazardous to Health Regulations

DSC: Differential Scanning Calorimetry

GRP: Glass Reinforced Plastic

HDT: Heat Distortion Temperature

IDLH: Immediately dangerous to life or health

ISO: International Organization for Standardization

MSDS: Materials Safety Data Sheets

OSHA: Occupational Safety and Health Act

(08)

Article 4.3
Nonmetallic Internal Lining for Pipe: Sprayed Form for Buried Pipe

1 DESCRIPTION

1.1 Background

This Article is for use of thermoset polymers as protective or structural lining for buried pipe when applied in a sprayed form (see Fig. 1). The pipe can be steel, cast iron, concrete, or other materials, located below ground/buried, and with/without liners (e.g., cement, paint). When using thermoset polymers, the repair is commonly called Cured-In-Place Pipe (CIPP). This Article does not apply to above-ground piping, pumps, valves, tanks, or pressure vessels.

Use of CIPP repair methods can provide added structural strength, increased chemical and abrasion resistance, reduced infiltration and exfiltration, and reduced pipeline flow resistance. This repair method is particularly useful for buried piping greater than 600 mm (24 in.) diameter.

The sprayed form application of nonmetallic internal lining can be considered the in-place formation of a composite pipe.

Epoxies are perhaps the best of the thermoset polymers for buried pipe rehabilitation due to their versatility, strength, adherence to the host pipe, low coefficient of friction, and chemical and abrasion resistance.

1.2 Advantages

Properly applied onto the inside of the host pipe, the polymer adheres well to the pipe and becomes part of a composite system (polymer lining plus the host pipe). The polymer can be reinforced with chopped fiber (i.e., glass, carbon), fiber cloth, preimpregnated carbon, or pultruded carbon, thereby making the composite pipe much stronger. The polymer spray form repair system can be manually used for patching portions of the buried pipe instead of the entire buried pipe. It is relatively easy to apply where the pipe size permits man entry.

1.3 Disadvantages

This repair method is more difficult to apply for buried pipe less than DN 600 (NPS 24) in diameter, since manned pipe entry and spraying is practically impossible for normally sized individuals. There is the possibility of applying the sprayed form repair system in small pipes by remotely-operated robots. This is available for specialized applications.

2 CAUTIONS AND LIMITATIONS

2.1 General

Part 1 of this Standard contains additional requirements and limitations. This Article shall be used in conjunction with Part 1.

2.2 Application Temperature Limitations

The thermoset polymer's maximum and minimum design temperature limitations shall be considered for the specific application, since the material properties are substantially affected above the T_g (glass transition temperature) or T_{HDT} (heat distortion temperature).

2.3 Operating Temperature Limitations

The thermoset polymer's maximum and minimum operating temperature shall be considered for the specific application, since the polymer performance depends greatly on its composition. Beyond that temperature, the service life of this repair method can be substantially shortened.

2.4 Application Humidity Limitations

The thermoset polymer's bond to the pipe substrate is affected by application humidity. The application humidity requirements shall be identified

(a) for polymers that use solvents for the application process, since humidity can affect the drying process

(b) for applications that need high bond strength to the pipe substrate, since high humidity can cause rapid oxidation (i.e., flash rust). This is particularly an important parameter for aluminum and iron pipe.

Thus, humidity within the application area needs to be controlled, as recommended by the manufacturer.

2.5 Application Surface Limitations

The effective formation of a composite pipe requires that the lining adhere to the host pipe. The lining adherence is sensitive to the surface cleanliness and the surface profile.

2.6 Application Curing Limitations

The curing for thermoset polymers is time/temperature sensitive. The curing process for lower application temperatures may require auxiliary heat to avoid extremely long cure times.

Fig. 1 Structural Liner In Raw Water System

3 DESIGN

3.1 General Design Considerations

There are three design application categories for CIPP repair.

(a) Design Application Category A — pipe corrosion protection liner from the contained fluid (nonload bearing)

(1) The CIPP application is assumed to carry no system loads.

(2) The liner shall be sized to provide protective barrier to further degradation.

(b) Design Application Category B — load-bearing member for a system within a partially deteriorated buried pipe

(1) This Article applies to continuously supported buried piping systems where the degraded host pipe still has sufficient strength to carry a portion of the soil, surface, and internal pressure loads.

(2) The liner shall be sized to resist the external groundwater hydrostatic load.

(c) Design Application Category C — load-bearing member for a system within a fully deteriorated buried pipe

(1) This Article applies when the buried host pipe has insufficient structural capacity to carry the soil, surface, and pressure loads and serves only as a form for CIPP application.

(2) The liner shall be sized to handle all applicable loads.

3.2 Types of Sprayed Form

3.2.1 Polymer System. The sprayed form repair system shall consist of polymer application, with or without reinforcing fiber. The reinforcing fiber may be chopped, cloth, partially cured, or pultruded materials. The sprayed form may use a variety of reinforcing fibers (i.e., glass, carbon, Kevlar). Typically the polymer resin and curing agent is mixed on-site, pumped through a spray nozzle, and applied directly to the internal pipe surface being protected or reinforced. The polymer may be manually mixed, the fiber manually wetted, and the combination polymer-fiber matrix manually applied to the pipe I.D.

3.2.2 CIPP Design Variables. The CIPP design shall consider the following for the specific application:

(a) system exposure (i.e., acids, solvents, water)

(b) operating temperatures (maximum, minimum, and range)
(c) coefficients of thermal expansion
(d) modulus of elasticity
(e) tensile strength

3.3 Piping Degradation Cases

Paragraphs 3.3.1 through 3.3.5 provide the recommended design application category that should be used with the five degradation case scenarios. Alternatively, other fitness-for-service standards (such as API RP 579, ASME B31G, or ASME FFS-1) may be used to determine if other design application categories may be employed, or if repairs are even necessary.

3.3.1 Piping Degradation, Case #1. Case #1 is where internal corrosion has not yet occurred or has penetrated less than the depth of the accepted corrosion allowance. In this case, the host pipe meets all of the necessary design requirements. The application of a protective CIPP lining may extend the design life of the host pipe to remain satisfactory for the life of the plant. This Case is a good application of design application Category A.

3.3.2 Piping Degradation, Case #2. Case #2 is where internal corrosion is very localized, such as pitting corrosion. Some pin hole leaks may be evident. With the exception of these small areas, the host pipe has not lost its corrosion allowance. The losses in these small areas do not affect the general overall strength of the host pipe and do not indicate any near term impending failure. The repair of these locally corroded areas will allow the host pipe to remain satisfactory until the next required inspection. This Case is a good application of design application Category B.

3.3.3 Piping Degradation, Case #3. Case #3 is where there is severe corrosion, limited to short lengths or sections of host pipe. This general corrosion might have been caused by loss or damage to the original liner, flaws in the host pipe, poorly controlled weld material, or loss of cathodic protection. The losses due to this generalized corrosion are greater than the corrosion allowance and some degree of failure of the host pipe might be eminent. This Case is a good application of design application Category B.

3.3.4 Piping Degradation, Case #4. Case #4 is where there is significant generalized internal corrosion. The host pipe has lost all or most of its corrosion allowance. The host pipe still maintains the majority of its required strength and is under no immediate danger of catastrophic failure. This Case is a good application of design application Category B or C.

3.3.5 Piping Degradation, Case #5. Case #5 is where there is severe generalized corrosion, either internal, external, or a combination. The host pipe is in immediate danger of failure. The host pipe can no longer be expected to carry the majority of the design loads. The host pipe may continue to undergo external corrosion even if a CIPP liner is installed. This Case is a good application of design application Category C.

3.4 Material Considerations

(a) This Article typically applies to thermoset polymers that may have reinforcing fiber.
(b) The thickness of the applied thermoset polymer (and amount/type of reinforcing fiber) shall depend on whether the material is to provide protective lining to pipe (design application Category A), to structurally augment the partially deteriorated host pipe (design application Category B), or to carry all the design loads of the pipe (design application Category C).
(c) Polymer mixing ratios, setting time, and curing time shall comply with the manufacturer specifications.

3.5 Material Property Determination

(a) The design life and the maximum/minimum temperatures to which CIPP will be exposed over its design life for all anticipated loading conditions shall be specified. Material properties shall be provided by the Manufacturer. Normally the Manufacturer has a variety of thermoset polymers to fit within the application needs.
(b) Material testing is addressed in para. 5.2.
(c) A time-temperature-corrected flexural modulus of elasticity shall be determined in accordance with ASTM D 790 or ISO 178 using the maximum temperature and design life from para. 3.5.1.
(d) A time-temperature-corrected ultimate tensile strength shall be determined in accordance with ASTM D 638, ASTM D 3039, or ISO 527 using the maximum/minimum temperature and design life from para. 3.5.1.
(e) The long-term creep performance of the material may be determined in accordance with ASTM D 2990 or BS EN 899-2.
(f) The coefficient of thermal expansion for the maximum and minimum temperatures from para. 3.5.1 shall be determined in accordance with ASTM D 696, ASTM E 831, or ISO 11359.
(g) The pull-off strength (adhesion) may be determined in accordance with ASTM D 3983.
(h) The lap shear strength may be determined in accordance with ASTM D 3165 or BS EN 1465.
(i) The peel or stripping strength may be determined in accordance with ASTM D 903.
(j) The abrasion resistance may be determined in accordance with ASTM D 4060 or CS 17.
(k) The impact strength may be determined in accordance with ASTM G 14.

3.6 Specific Design Requirements

3.6.1 Design Thickness. The design thickness of the CIPP is a function of the polymer, reinforcing material,

and design application category (A, B, or C). The anticipated or postulated loads shall be specified in the design specification for the piping system modifications.

3.6.2 Design Specification Required Loads. The design specification shall address the following loads:

(a) Design for Internal Fluid Pressure. Internal pressure is typically the first design consideration for buried pipe. Having selected a pipe material and diameter compatible with the required flow, the designer calculates the minimum wall thickness required to safely sustain the design pressure at the design temperature. The equation used to calculate the wall thickness of buried piping is specified in the code or standard applicable to the service (see section 7 for references). In all cases, the intent of the equation for wall thickness is to limit the hoop stress in the host pipe (original design), composite pipe, or CIPP to a fraction of the material's specified minimum yield or ultimate strength. The form of the equation for the original design varies with the applicable code and pipe material, but it is not different than the above-ground pressure design equation (pipe wall is sized the same way for underground and above-ground service). For design application Categories B and C, the CIPP shall accommodate the system design pressure. See Mandatory Appendix I for applicable equations for CIPP.

(b) Design for Soil Loads. Soil loads are an important consideration for pipes made of rigid and nonductile materials such as concrete or cast iron and pipes with large D/t such as encountered in civil engineering applications. Conversely, earth loads are rarely quantified for pressure piping made of ductile materials such as steel or polyethylene. For design application Category C, the CIPP shall withstand the soil load. See Mandatory Appendix I for applicable equations for CIPP.

(c) Design for Surface Loads. The effect of heavy surface loads, such as highway traffic, railroad, or structures built above the buried pipe decreases as the square of the height of soil covers and is often controlled by providing a minimum depth of cover above the pipe. Minimum depth of covers are specified by codes and standards and should be verified by analysis for particularly heavy surface loads. For design application Category C, the CIPP shall withstand the surface load. See Mandatory Appendix I for applicable equations for CIPP.

(d) Design for Temperature Change. Buried pipelines are often operated at temperatures that are not significantly above the surrounding soil temperature. If there is no differential expansion between the soil and the pipe, then a thermal analysis is not required. In cases where the fluid is hot, compressive and bending stresses are generated as the pipe expansion is restrained by the surrounding soil, unless a mineral fiber cushion (or equivalent) has been wrapped around elbows and bends to permit thermal expansion. See Mandatory Appendix I for applicable equations for CIPP.

3.6.3 Design Specification Optional Loads. The design specification should consider the following loads:

(a) Design for Waterhammer. The response of a buried pipe to waterhammer differs from the behavior of above-ground piping, since it is restrained by soil that limits its movements and bending moments. Under the excessive hoop stresses from the pressure pulses that accompany waterhammer, fitting, valve, or pipe, rupture is possible.

(b) Design for Seismic Loads. In practice, the design of buried pipe for seismic loads is limited to critical applications in earthquake prone areas. An earthquake may affect the integrity of a buried pipe in two possible ways: through wave passage (transient ground deformation) and through permanent ground deformation. Failures in welded steel pipes are more often due to soil failures (liquefaction, landslides, fault movement) rather than the transient passage of seismic waves.

(c) Design for Other Loads. Other applicable loads should be considered (i.e., abrasion, impact).

4 FABRICATION (INSTALLATION)

4.1 Host Pipe Examination and Preparation

4.1.1 Soundness Examination. A soundness examination shall be performed to determine the design condition of the host pipe, i.e., partially or fully deteriorated.

4.1.2 Safe Working Conditions. Safe working conditions shall be established including

(a) identification of materials to be handled, including copies of MSDS.

(b) applicable safety regulations (e.g., OSHA) assessment for the process.

(c) specifying details of personal protective measures to be adopted.

(d) listing of hazards associated with pipe being repaired and equipment in the vicinity of the repair site with protective measures. Note that for a fully deteriorated pipe, special safety precautions may be necessary prior to personnel entry into the pipe.

4.1.3 Surface Preparation. The interior of the host pipe shall be cleaned of loose rust, scale, and biofouling. For best adhesion of the thermoset polymer to the host pipe, the inside pipe surface shall be prepared to SSPC-SP-10/NACE 2 near-white-blast cleaning condition or to ASTM D 4258 for concrete pipe.

4.2 Polymer Mixing

Resin and curing agent batches and mixture proportion shall be verified, per the manufacturer's recommendations.

4.3 Polymer Application

(a) Polymer shall be applied in even and overlapping patterns until design thickness is achieved.

(b) When reinforcing fibers are added, they shall be evenly dispersed, wetted, and rolled/compressed to remove voids. Then the top layer of polymer is applied over the reinforcing fibers to provide a smooth, monolithic liner.

(c) If pultruded or preimpregnated carbon is being utilized, then the application process shall be as follows:

(1) apply adhesive layer of polymer

(2) press the carbon into the adhesive polymer

(3) apply the top coat to the structural liner to provide a smooth, monolithic surface

5 EXAMINATION

5.1 Test Sample Retrieval

Samples may be taken in accordance with the following for each CIPP batch installed:

(a) Samples shall be taken on coupon specimens identical to material applied onto the host pipe (similarly cured).

(b) Number of samples shall be sufficiently large to provide statistically adequate number of specimens for each of the test procedures required in material testing (para. 5.2).

(c) Samples shall be marked to provide traceability.

5.2 Material Testing

The test samples obtained in accordance with the para. 5.1 requirements for test sample retrieval should be tested to confirm the following design basis material property values:

(a) time-temperature-corrected flexural modulus of elasticity for CIPP (E_F from Mandatory Appendix I)

(b) time-temperature-corrected ultimate tensile strength of CIPP (S_T from Mandatory Appendix I)

(c) the coefficient of thermal expansion used in the analysis required by Mandatory Appendix I

5.3 CIPP-Installed Geometry Verification

(a) The minimum installed CIPP wall thickness shall be verified to meet the design requirements using ultrasonic or other examinations.

(b) Examination shall be in accordance with approved procedures by qualified personnel.

(c) A set of four measurements, equally spaced around the circumference of the CIPP, should be taken at each end and at one intermediate point.

(d) Additional sets of measurements should be taken in areas of significant host pipe degradation.

5.4 Documentation of CIPP As-Installed Condition

(a) A visual examination shall be performed.

(b) Voids, surface flaws, and areas of improper curing shall be evaluated.

(c) All inspection/examination and corrective action shall be in accordance with Mandatory Appendix II.

5.5 Monitoring Plans

(a) A plan for monitoring the corrosion rate of a partially deteriorated host pipe shall be prepared.

(b) No monitoring plan is required for a fully deteriorated host pipe, since the CIPP is sized to provide full structural integrity.

(c) A plan for monitoring CIPP for degradation due to environmental conditions, erosion, or thermal expansion/contraction should be prepared.

6 TESTING

A system pressure test shall be performed on the CIPP as specified in paras. 6.1 and 6.2.

6.1 Isolable Pipe

6.1.1 Pressure Decay Test. The system integrity test for buried components that are isolable by valves or other means should consist of pressure decay over time that determines the leakage rate.

6.1.2 Fluid Volume Makeup Test. Alternatively, the system integrity test may consist of a fluid volume makeup to maintain a set pressure over time that determines the leakage rate.

6.1.3 Acceptance Criteria. The acceptable rate of pressure loss or volume makeup should be established over a minimum of 1 hr. Factors that may influence the acceptable rate of pressure loss or volume makeup are

(a) volume of the system pressure test

(b) leak tightness requirements for the buried components

6.2 Nonisolable Pipe

6.2.1 Flow Impairment Test. The system integrity test for nonisolable buried components should consist of a test to confirm that flow during operation is not impaired.

6.2.2 Change in Flow Test. Alternatively, the system integrity test may determine the change in flow between the ends of the buried components.

6.2.3 Acceptance Criteria. The acceptable flow or change in flow should be established.

7 REFERENCES

7.1 Referenced Codes and Standards

API RP 579 (latest edition), Fitness-for-Service

Publisher: American Petroleum Institute (API), 1220 L Street, NW, Washington, DC 20005-4070

ASME B31G-1991, Manual for Determining the Remaining Strength of Corroded Pipelines: A

Supplement to ASME B31 Code for Pressure Piping
ASME FFS-1-2007, Fitness-for-Service

Publisher: The American Society of Mechanical Engineers (ASME), Three Park Avenue, New York, NY 10016-5900; Order Department: 22 Law Drive, P.O. Box 2300, Fairfield, NJ 07007-2300

ASTM D 638-2003, Standard Test Method for Tensile Properties of Plastics
ASTM D 696-2003, Standard Test Method for Coefficient of Linear Thermal Expansion of Plastics Between −30°C and 30°C With Vitreous Silica Dilatometer
ASTM D 790-2003, Standard Test Method for Flexural Properties of Unreinforced and Reinforced Plastics and Insulating Materials
ASTM D 903-1998, Standard Test Method for Peel or Stripping Strength of Adhesive Bonds
ASTM D 2105-1997, Standard Test Method for Longitudinal Tensile Properties of "Fiberglass" (Glass-Fiber-Reinforced Thermosetting-Resin) Pipe and Tube
ASTM D 2583-1995, Test Method for Indentation Hardness of Rigid Plastics by Means of Barcol Impressor
ASTM D 2990-2001, Standard Test Method for Tensile, Compressive, and Flexural Creep and Creep-Rupture of Plastics
ASTM D 3039-2000, Standard Test Method for Tensile Properties of Polymer Matrix Composite Materials
ASTM D 4258 (latest edition), Standard Practice for Surface Cleaning Concrete for Coating
ASTM D 5162 (latest edition), Standard Practice for Discontinuity (Holiday) Testing of Nonconductive Protective Coating on Metallic Substrates
ASTM G 14-2004, Standard Test Method for Impact Resistance of Pipeline Coatings (Falling Weight Test)

Publisher: American Society for Testing and Materials (ASTM International), 100 Barr Harbor Drive, P.O. Box C700, West Conshohocken, PA 19428-2959

BS EN 59-1977, Measurement of hardness by means of a Barcol impressor
BS EN 1465-1995, Determination of tensile lap shear strength of rigid to rigid bonded assemblies

Publisher: British Standards Institution, Inc. (BSI), 12110 Sunset Hills Road, Reston, VA 20190-5902

ISO 178-2001, Plastics — Determination of flexural properties
ISO 527-1993, Plastics — Determination of tensile properties
ISO 868-2003, Plastics and ebonite — Determination of indentation hardness by means of a durometer (Shore hardness)

Publisher: International Organization for Standardization (ISO), 1 ch. de la Voie-Creuse, Case postale 56, CH-1211, Genève 20, Switzerland/Suisse

NACE RP 0188-1988, Discontinuity (Holiday) Testing of Protective Coating

Publisher: National Association of Corrosion Engineers (NACE International), 1440 South Creek Drive, Houston, TX 77084-4906

SSPC-SP10 (latest edition), Near-White Metal Blast Cleaning

Publisher: The Society for Protective Coatings (SSPC), 40 24th Street, Pittsburgh, PA 15222-4656

7.2 Related Codes and Standards

The following are related codes and standards. Unless otherwise specified, the most recent standard (latest edition) available shall be used.

ASME Boiler and Pressure Vessel Code, Section III, Division 1, Subsection ND (ND-3611.2), Piping Design/General Requirements/Acceptability/Stress Limits
ASME Boiler and Pressure Vessel Code, Section III, Division 1, Subsection ND [ND-3672.6(a)], Piping Design/General Requirements/Expansion and Flexibility/Stresses/Stress Range
ASME Boiler and Pressure Vessel Code, Code Case N-589-1-2002, Class 3 Nonmetallic Cured-in-Place Piping; Section XI, Division 1
ASME B31.1, Power Piping
ASME B31.3, Process Piping
ASME B31.4, Pipeline Transportation Systems for Liquid Hydrocarbons and Other Liquids
ASME B31.5, Refrigeration Piping
ASME B31.8, Gas Transmission and Distribution Piping Systems
ASME B31.9, Building Services
ASME B31.11, Slurry Transportation Piping Systems

Publisher: The American Society of Mechanical Engineers (ASME), Three Park Avenue, New York, NY 10016-5990; Order Department: 22 Law Drive, P.O. Box 2300, Fairfield, NJ 07007-2300

ASTM D 1763, Standard Specification for Epoxy Resins
ASTM D 2837, Standard Test Method for Obtaining Hydrostatic Design Basis for Thermoplastic Pipe Materials
ASTM D 2992, Practice for Obtaining Hydrostatic or Pressure Design Basis for Glass Fiber Reinforced Thermosetting Resin Pipe and Fittings
ASTM D 4787, Standard Practice for Continuity Verification of Liquid or Sheet Lining Applied to Concrete Substrates
ASTM F 412, Standard Terminology Relating to Plastic Piping Systems
ASTM G 8, Standard Test Method for Cathodic Disbonding of Pipeline Coatings

Publisher: American Society for Testing and Materials (ASTM International), 100 Barr Harbor Drive, P.O. Box C700, West Conshohocken, PA 19428-2959

AWWA C-150/A21.51, Standard for Thickness Design of Ductile Iron Pipe
AWWA C-151/A21.51, Standard for Ductile Iron Pipe, Centrifugally Cast, for Water or Other Liquids
AWWA C-200, Standard for Steel Water Pipe 6 in. and Larger
AWWA C-300, Standard for Reinforced Concrete Pressure Pipe, Steel-Cylinder Type, for Water and Other Liquids
AWWA C-301, Standard for Pre-stressed Concrete Pressure Pipe, Steel-Cylinder Type, for Water and Other Liquids
AWWA C-302, Standard for Reinforced Concrete Pressure Pipe, Non-cylinder Type
AWWA C-303, Standard for Concrete Pressure Pipe, Bar-Wrapped Steel-Cylinder Type
AWWA C-900, Standard for Polyvinyl Chloride (PVC) Pressure Pipe, 4 in. Through 12 in., for Water Distribution
AWWA C-905, Standard for Polyvinyl Chloride (PVC) Water Transmission Pipe, Nominal Diameter 14 in. through 36 in.
AWWA C-906, Standard for Polyethylene (PE) Pressure Pipe and Fittings, 4 in. through 63 in., for Water Distribution
AWWA C-950, Standard for Fiberglass Pressure Pipe
AWWA M-11, Steel Pipe — A Guide for Design and Installation
AWWA M-23, PVC Pipe — Design and Installation
AWWA M-45, Fiberglass Pipe Design

Publisher: American Water Works Association (AWWA), 6666 West Quincy Avenue, Denver, CO 80235

SSPC-SP5 (latest edition), White Metal Blast Cleaning
SSPC-SP6, Commercial Blast Cleaning
SSPC-SP7, Brush-Off Blast Cleaning
SSPC-SP8, Pickling

Publisher: Society for Protective Coatings (SSPC), 40 24th Street, Pittsburgh, PA 15222-4656

7.3 Related Technical Publications

(1) G. A. Antaki, "A Review of Methods for the Analysis of Buried Pressure Piping," Welding Research Council Bulletin 425, New York, September 1997

(2) R. H. Walker and C. W. Rowley, "Structural Lining Systems in the Service Water Environment," EPRI 12th Annual Service Water Systems Reliability Improvement Seminar, Biloxi, Mississippi, July 1999

(3) E. C. Goodling, "Buried Piping — An Analysis Procedure Update," ASME PVP, 1983

(4) A. P. Moser, "Buried Pipe Design," McGraw Hill, 1990

(5) R. K. Watkins and A. P. Moser, "Soil and Surface Loads on Buried Pipes Including Minimum Cover Requirements," ASME PVP, Volume 360, 1998

(6) "Design of Buried Steel Pipe," American Lifeline Alliance, ASCE, Reston, VA, latest edition

(7) D. F. Adams, L. A. Carlsson, and R. B. Pipes, "Experimental Characterization of Advanced Composite Materials," CRC Press, Third Edition, 2003

Article 4.3, Mandatory Appendix I
Design Considerations for Buried Pipe

I-1 WALL THICKNESS OF CIPP

(a) The required CIPP design wall thickness, t_r, for a partially deteriorated host pipe (design application Category B) shall be at least the greater of the thickness determined by eqs. (I-1) and (I-3). This minimum thickness shall be increased to provide for all applicable manufacturing-specific installation constructability tolerances and shall be used in the design analysis.[1]

(b) The t_r for a fully deteriorated host pipe shall be at least the greater of the thickness determined by eqs. (I-1) and (I-2). This minimum thickness shall be increased to provide for all applicable manufacturing-specific installation constructability tolerances, shall be referred to as t_n, and shall be used in the analysis required by analysis equations below.[1]

I-2 DESIGN EQUATIONS

I-2.1 Internal Pressure

Equation (I-1) shall be used to determine the t_r required due to internal pressure on CIPP contained in a partially or fully deteriorated host pipe.

$$t_r = \frac{D_O}{\left[\left(\frac{2S_T}{P_D N_S}\right) + 1\right]} \tag{I-1}$$

where

D_O = outside diameter of CIPP (inside diameter of host pipe), mm (in.)
N_S = design safety factor (typically 2)
P_D = internal design pressure, MPa (psig)
S_T = time-temperature-corrected ultimate tensile strength of CIPP, MPa (psi)
t_r = required CIPP design wall thickness, mm (in.)

I-2.2 External Pressures/Fully Deteriorated Pipes

Equation (I-2) shall be used to determine the t_r required due to applicable external pressures on CIPP contained in a fully deteriorated host pipe.

$$t_r = 0.721\, D_O \left[\frac{(N_E q_t / C)^2}{E_F R_w B' E'_s}\right]^{1/3} \tag{I-2}$$

where

B' = coefficient of elastic support
= $1/(1+4e^{-0.213H\,(m)}) = 1/(1+4e^{-0.065H\,(ft)})$
C = ovality reduction factor =

$$C = \left[\left(1 - \frac{q}{100}\right) / \left(1 + \frac{q}{100}\right)^2\right]^3$$

E_F = time-temperature-corrected flexural modulus of elasticity for CIPP, MPa (psi)
E'_S = modulus of soil reaction, MPa (psi)
H = height of soil above top of host pipe, m (ft)
H_w = height of groundwater above top of host pipe, m (ft)
N_E = Design Factor (typically 2)
q = ovality (%) of host pipe

$$100 \times \frac{\text{max. measured dia.} - \text{min. measured dia.}}{\text{average measured dia.}}$$

q_t = total external pressure on CIPP, MPa (psi)
R_w = water buoyancy factor (0.67 min.)
= $1 - [0.33(H_w/H)]$

I-2.3 External Pressures/Partially Deteriorated Pipes

Equation (I-3) shall be used to determine the t_r required due to applicable external pressures on CIPP contained in a partially deteriorated host pipe.

$$t_r = \frac{D_O}{\left[\frac{2K E_F C}{q_h N_E (1 - \nu^2)}\right]^{1/3} + 1} \tag{I-3}$$

where

K = buckling enhancement factor of the soil and host pipe adjacent to CIPP. A value of 7.0 may be used.
q_h = groundwater hydraulic load, MPa (psi)
ν = Poisson's ratio = 0.30; or Poisson's ratio may be determined using the test method of ASTM D 2105

I-3 APPLIED LOADS DESIGN

To validate CIPP design, the analysis shall consider the effects due to applicable sustained and occasional loads specified in the owner's requirements.

[1] Although the partially deteriorated host pipe assumption could result in a thinner wall thickness than a fully deteriorated host pipe, it will require future monitoring of the host pipe whereas the fully deteriorated pipe will not.

I-3.1 Sustained and Occasional Loads

Stresses due to sustained and occasional loads shall meet the requirements of eq. (I-4).

$$\frac{P_{mo}D_o}{4t_n} + 0.75i\left[\frac{M_A + M_B}{Z}\right] + \frac{S_\alpha}{A} \le \frac{kS_T}{4} \qquad \text{(I-4)}$$

where

A = cross-sectional area of CIPP, mm^2 (in.^{2})
D_O = outside diameter of CIPP, mm (in.)
i = stress intensification factor (SIF). The SIF for sprayed form CIPP in a straight or curved host pipe shall be taken as unity, thus "0.75i" equals "1"
k = occasional load factor = 1.2, if occasional loads are included in eq. (I-4); otherwise, $k = 1$
M_A = resultant moment loading on cross section due to weight and other applicable sustained loads, N·mm (in.-lb). If the CIPP is continuously supported by the existing soil system or the partially deteriorated host pipe, the M_A term may be neglected.
M_B = resultant moment loading on cross section due to applicable occasional loads, such as thrusts from relief and safety valve loads, from pressure and flow transients, and seismic inertia, N·m (in.-lb). For seismic inertia, the calculation may use only one-half of the range. The effects of seismic displacements may be excluded from eq. (I-4) if they are included in eq. (I-5).
P_{mo} = maximum operating pressure, MPa (psig)
r_m = mean radius of CIPP, mm (in.)
S_α = axial loading on cross section due to seismic displacements or other applicable occasional loads, N (lb)
S_T = time-temperature-corrected ultimate tensile strength of CIPP, MPa (psi)
t_n = nominal CIPP wall thickness, mm (in.)
Z = section modulus of CIPP, mm^3 (in.^{3})
= $\pi r_m^2 t_n$

I-3.2 Thermal Expansion Loads

Stresses due to thermal expansion loads shall meet the requirements of eq. (I-5).

$$\frac{iM_C}{Z} + \frac{S}{A} \le \frac{S_T}{2} \qquad \text{(I-5)}$$

where

M_C = resultant moment loading on cross section due to thermal expansion, N·mm (in.-lb). Also, includes moment effects of seismic displacements if they were omitted from eq. (I-4).
S = axial loading on cross section due to seismic displacements, if included, and thermal expansion, N (lb)

I-3.3 Determination of Resultant Moment

For eqs. (I-4) and (I-5), the resultant moments for straight and curved piping members shall be calculated as follows:

$$M_j = (M_A^2 + M_B^2 + M_C^2)^{1/2}$$

where

j = A, B, or C, as defined in eqs. (I-4) and (I-5)

Article 4.3, Mandatory Appendix II Inspection/Examination and Corrective Action Requirements for CIPP (08)

II-1 GENERAL

All required corrective actions to the CIPP due to voids, surface flaws, and areas of improper curing shall be in accordance with this Appendix.

II-2 POLYMER MIXTURE

II-2.1 Real-time Mixture Control

Mixture control may be confirmed by color of the polymer, per the manufacturer's recommendations.

II-2.2 Resultant Mixture Control

Color chips from the manufacturer may be used to compare polymer to the proper mixture of polymer.

II-3 POLYMER THICKNESS SAMPLING

II-3.1 Number of Layers

The polymer-fiber matrix thickness may be measured based on layer thickness from the manufacturer times the number of layers. This thickness may be compared to the minimum design calculations for required thickness.

II-3.2 NDE Measurement

The polymer-fiber matrix thickness may be measured with UT or other NDE instruments.

II-4 POLYMER HARDNESS

II-4.1 Hardness Measurement

The hardness of the cured polymer may be measured for quality control of the installed mix ratio.

(a) Barcol hardness — per ASTM D 2583 or BS EN 59

(b) Shore hardness — per ASTM D 2240 or ISO 868

II-4.2 Sample Points

Hardness sample points may be determined at random approximately every three feet on installed length and at approximately four circumferential points. Hardness sample points should also be taken wherever the installed visual color of the polymer looks uneven (indicates possible poor mixing of polymer resin and curing agent).

II-4.3 Curing Catalyst

The curing process may be enhanced by the addition of the curing catalyst (e.g., heat, water, UV radiation).

II-5 POLYMER COVERAGE

II-5.1 Visual Inspection

The polymer coverage may be visually inspected to identify "pin holes" and imperfections.

II-5.2 Holiday Test

A "holiday test" as specified by the manufacturer (whose requirements are typically based on ASTM D 5162 or NACE RP 0188) may be used to identify pin holes and thin spots in the polymer coverage. This test is very effective for polymers with glass reinforcing fibers. When carbon reinforcing fibers are utilized, they need to be insulated from the metallic substrate with a polymer primer, polymer-saturated glass cloth, or both for the "holiday test" to be effective.

II-6 SURFACE DEFECT CORRECTIVE ACTIONS

II-6.1 Substrate Preparation

Grind away the polymer around the surface defect to create adhesive bonding sites.

II-6.2 Polymer Mixing

Mix the resin and curing agent of the polymer in accordance with manufacturer's recommended proportions.

II-6.3 Polymer Application

Spray or trowel the polymer over the surface defect.

II-6.4 Polymer Inspection

Inspection of the polymer system, applied to the surface defect in accordance with the CIPP polymer manu-

facturer's recommendations, shall be the determining factor in judging cure completion.

II-6.5 Excess Polymer

Grind away, as required, the excess polymer so that the corrective action follows the contour of the existing CIPP. Note this excess polymer only affects the flow surface of the pipe, not the structural aspects of the CIPP.

II-7 CORRECTIVE ACTION FOR AREAS OF INSUFFICIENT CURING

Areas of insufficient curing shall be completely corrected by steps identified in para. II-6 above. Inspection in accordance with the CIPP polymer manufacturer's recommendations shall be the determining factor in judging cure completion.

Article 4.3, Mandatory Appendix III
Glossary of Terms and Acronyms

(08) III-1 GLOSSARY OF TERMS

cured-in-place pipe (CIPP): the buried piping modification method with a thermoset polymer into a host pipe.

curing: the changing of material properties of a thermoset polymeric system by the application of heat, water, radiation, or other means into a more stable and usable condition.

epoxies: these are usually a two-component thermoset polymeric system primarily composed of epichlorahydrin and Bisphenol A combined with an amine-based curing agent.

fully deteriorated host pipe: a host pipe that is not relied upon to support soil, surcharge, or groundwater loads.

host pipe: the old existing pipe to be modified.

partially deteriorated host pipe: a host pipe that is relied upon to support soil and surcharge loads throughout its design life.

polymer: a plastic material that can be thermoset (two-part polymer) or thermoplastic (one-part polymer) in nature.

polymer filler: a relatively inert material added to a polymer to modify its strength, permanence, or working properties.

pultruded carbon: a relatively thin strip of polymer and carbon already cured and somewhat malleable to forming to the application geometry.

reinforcement: high strength fibers imbedded in the polymer, resulting in mechanical properties superior to those of the base polymer without the fibers.

surcharge: loading on a buried host pipe produced by ground transportation traffic, e.g., truck or railway.

thermoset polymer: these are plastics that cannot be resoftened following polymerization (includes Bakelite, epoxy, polyurethane, polyesters, vinyl esters, and paints).

III-2 GLOSSARY OF ACRONYMS (08)

ASME: The American Society of Mechanical Engineers (ASME).

ASTM: American Society for Testing and Materials (ASTM International)

AWWA: American Water Works Association

BS: British Standards

CIPP: cured-in-place pipe

DN: dimensional number

I.D.: inside diameter

ISO: International Organization for Standardization

MSDS: material safety data sheet

NACE: National Association of Corrosion Engineering

NDE: nondestructive examination

NPS: Nominal Pipe Size

OSHA: Occupational Safety and Health Administration

SSPC-SP: Steel Structures Painting Council Standards

UV: ultra violet (radiation)

PART 5
EXAMINATION AND TESTING

(08)

Article 5.1
Pressure and Tightness Testing of Piping and Equipment

1 DESCRIPTION

(a) This Article provides general good practice for determining the type of test, the test pressure, and the procedure for pressure and tightness testing of pressure equipment, including tubular heat exchangers, pressure vessels, and piping systems.

(b) General information regarding the various types of tests to choose from is provided, including application, benefits, and limitations.

(c) Refer to individual repair articles of PCC-2 for any pressure or leak testing requirements or recommendations that should be followed.

2 LIMITATIONS

(a) Part 1 of this Standard contains additional requirements and limitations. This Article shall be used in conjunction with Part 1.

(b) This Article shall be used for field pressure or tightness testing of existing equipment and piping using either of the two fluid mediums, liquid or gas.

(c) This Article shall not be used for vacuum testing of equipment or piping.

(d) This Article does not address use of devices or methods to isolate a system or a component to perform pressure or tightness testing. The user is cautioned to ensure that use of any device is done in accordance with the requirements of its manufacturer, and the isolation of any system for pressure or tightness testing is verified.

(e) This Article addresses pneumatic testing. Pneumatic testing is potentially hazardous, much more than hydrostatic testing due to the higher levels of potential energy in the pressurized system; therefore, all reasonable alternatives shall be considered before this option is selected.

3 DESIGN

3.1 Definitions

closure weld: the final weld connecting piping systems or components that have been successfully pressure tested in accordance with the applicable code of construction.

hydrostatic test: a pressure or tightness test where liquid, typically water, is the test medium.

in-service leak test: a test using the process medium of the pressure equipment performed at start-up of the equipment.

pneumatic test: a pressure or tightness test where a gas, generally nitrogen or air, is the test medium.

pressure test: a test performed to ensure the gross integrity of the pressure component on new pressure equipment, or on previously manufactured pressure and piping equipment that has been or is in service and that has undergone an alteration or repair to a pressure boundary(s) to ensure the gross integrity of the pressure component to the original code of construction. A pressure test may be performed with liquid (hydrostatic test), with gas (pneumatic test), or a combination of both (hydro-pneumatic test).

tightness test: a test that is performed to ensure overall leak tightness of the system or its connections before the process medium is introduced.

3.2 Reasons for Pressure and Tightness Testing

(a) The primary purpose of performing a pressure test is to verify the integrity of a pressure system. This is especially true when welded repairs or alterations have been performed on the pressure boundary. Pressure and tightness testing are not substitutes for proof testing a design.

(b) Pressure or tightness tests can be used to check for pressure system leakage, especially in flanged joints. Tightness tests may be performed in conjunction with the pressure test.

(c) Hydrostatic pressure testing can provide some mechanical stress relieving. This is accomplished when

local regions of high stress, such as at stress concentrations and crack-like imperfections, undergo local yielding during the pressure test. Release of pressure then produces compressive residual stress in these regions, such that when pressure is reapplied, the operating stress is less than would have occurred otherwise. This can help mitigate the risk of brittle fracture when it is a consideration. Subsequent operation, especially at elevated temperatures, can reduce or eliminate any benefit toward stress relief or brittle fracture control. Hydrostatic pressure testing does not eliminate the need for postweld heat treatment, whether required by the applicable code of construction or by the user's requirements.

(d) Tightness testing may be considered when structural integrity does not need to be verified but when leak tightness must be verified prior to start-up.

(e) In-service leak testing can be considered when structural integrity does not need to be verified and the consequences of a leak during start-up are acceptable, or when permitted by the applicable code of construction or post-construction code.

3.3 Test Type Selection

The requirement for pressure testing can be found in the applicable code of construction or post-construction code. When no test is specifically referenced, Fig. 1 shall be used to determine the type of test to be performed.

3.4 Pressure Test — General

(a) A pressure test of equipment or a piping system should be considered if an alteration or repair has been performed, if the equipment has been rerated, or it needs to be recertified to determine integrity.

(b) A pressure test may not be required for rerating equipment using a higher allowable stress since the original pressure test could be higher than the test pressure required for rerating.

(c) Pressure testing [or alternatively, tightness testing; see para. 6.3(a)] should be considered during routine inspections and after cleaning operations when the integrity of tube-to-tubesheet joints is in question. Following the completion of the pressure test, the tubes should be inspected for buckling that may have occurred.

3.4.1 Exclusions From Hydrostatic Test. Pressure testing should be performed hydrostatically unless one of the conditions specified in the following apply:

(a) The equipment, piping, and/or supports, including foundations, cannot adequately support the liquid weight.

(b) The equipment or piping cannot be dried and traces of the test liquid may result in contamination of the system or its contents after returning to service.

(c) The equipment or piping contains internal linings that could be damaged by the test medium.

3.4.2 Pneumatic Test Conditions. If a hydrostatic test cannot be performed per para. 3.4.1, then a pneumatic pressure test should be considered.

(a) If a pneumatic pressure test would present unacceptable hazards such as risk of brittle fracture at the metal test temperature, then a substitution for pressure testing should be developed.

(b) See also para. 6.2(d) for information regarding the need for risk analysis.

3.4.3 Nondestructive Examination Considerations. Nondestructive examination may be considered in lieu of pressure testing to verify repairs or alterations in some instances. This may require the use of tightness testing as well.

3.5 Documentation

A pressure test record form should be prepared prior to the pressure test and completed upon acceptance of the test by the owner or the owner's designated representative. A sample record form is provided in Mandatory Appendix I.

4 FABRICATION

Within the context of this Article, this section is not applicable.

5 EXAMINATION

Within the context of this Article, visual examination shall be performed during the pressure, tightness, or in-service leak test to determine if any leakage is occurring during the test. When visual examination is not possible, such as for underground piping, monitoring of system pressure for pressure drop during tightness or in-service leak test may be substituted when approved by the owner. See also paras. 6.1(t)(8) and 6.2.1.3(c) regarding safety practices.

6 TESTING

6.1 Hydrostatic Pressure Test of Pressure Vessels or Piping Systems

(a) The fabrication and in-service inspection records along with any necessary operational records should be reviewed prior to testing to determine if the pressure component/system has experienced a credible damage mechanism. Consideration should be given to how each mechanism could manifest itself during a pressure test. Section 7 provides references that provide considerations for damage mechanisms.

(1) The inspection records should be reviewed for thinning beyond the specified limit. If thinning has occurred beyond the specified corrosion allowance, an engineering evaluation shall be performed using current inspection data.

Fig. 1 Test Type Selection

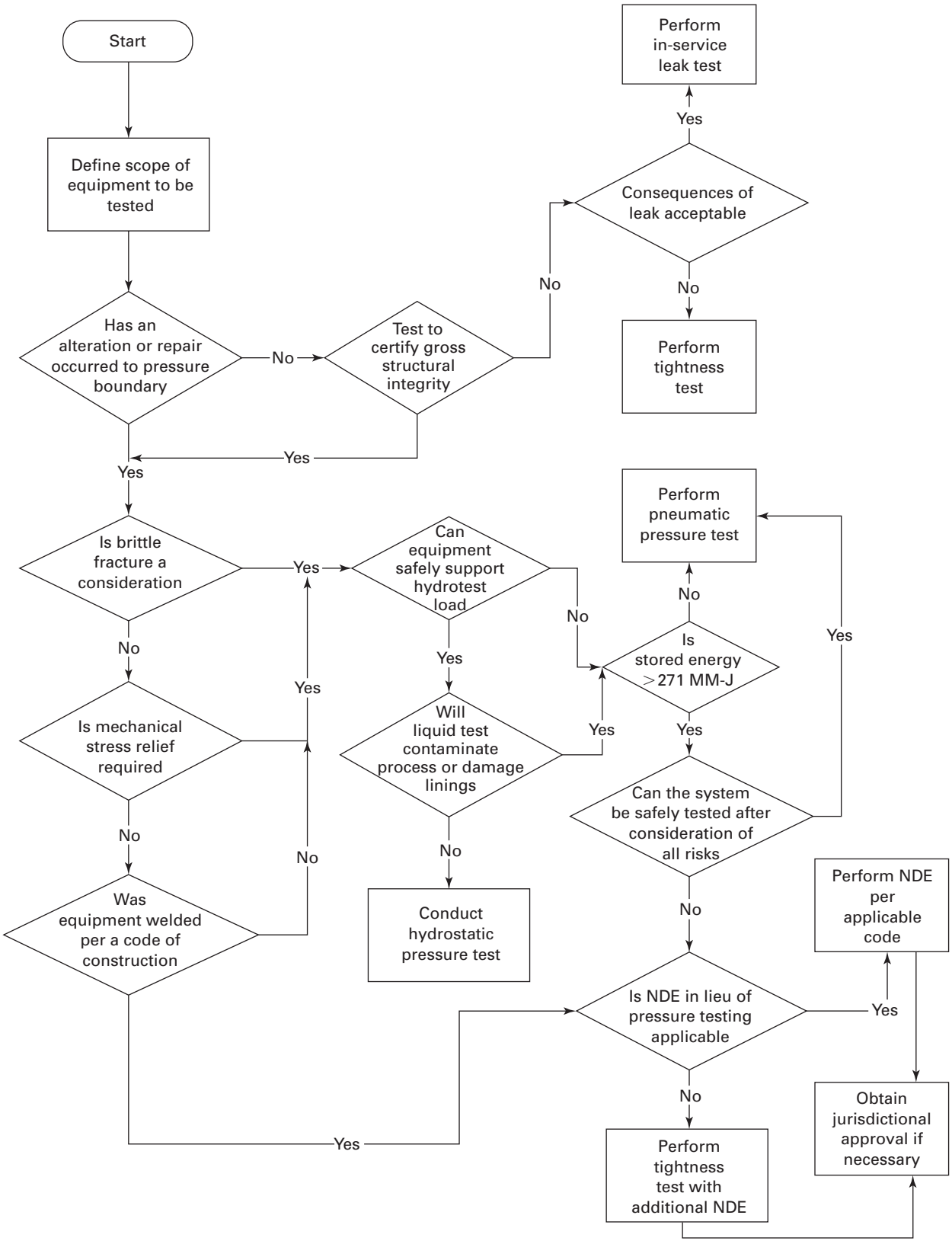

(2) The material may have been subjected to damage due to temperature or process exposure. If evidence of damage is found by inspection, an engineering evaluation shall be performed using current inspection data.

(3) The component/system may have been damaged by mechanical means such as high vibration. Consideration should be given to analyzing the system for areas where damage could occur and then inspecting these areas prior to testing to look for evidence of damage.

(b) In order to reduce the risk of brittle fracture during the test, the temperature of the metal during the pressure test of pressure vessels should be maintained at a minimum of 17°C (30°F) above the minimum design metal temperature (MDMT) (as shown on the Manufacturer's Data Report).

(1) If the MDMT is unknown, the minimum allowable temperature (MAT) of the component or system should be determined using a fitness-for-service evaluation.

(2) If a vessel made of low alloy steel has been subjected to thermal treatment or service temperatures over 370°C (700°F), an upward shift in the ductile-to-brittle transition temperature may have occurred. This loss of toughness may not be readily apparent during operation; however, the vessel may be susceptible to brittle fracture. Therefore, the temperature used for the pressure test may need to be determined by a fitness-for-service evaluation.

(c) When pressure testing piping systems, the ambient temperature should be greater than 2°C (35°F). When pressure testing at colder temperatures, the use of an antifreeze solution should be considered as the test medium to prevent freezing; however, the metal temperature should be kept above the ductile-brittle transition temperature. Additional guidance regarding pressure testing at cold temperatures may be found in the references listed in section 7 of this Article.

(d) The vessel and its supports and the foundation and/or the piping system and its supports and support structures should be evaluated to determine if they will adequately support the weight of the test medium.

(e) Pressure gages used for recording test pressures should be calibrated and located at the highest point on the vessel or on the piping system. The gages should meet the requirements of ASME PTC 19.2 or similar gage performance standard, and be corrected as required to compensate for the static head present in the system.

(f) Vents shall be provided at the high points of the vessel and/or piping system to purge air from the tested component while it is being filled.

(g) The vessel or piping system shall be evaluated for components that will not withstand the test pressure, or will otherwise interfere with a pressure test. Examples of these components include orifice plates, flow nozzles, control valves, expansion joints, etc.

(h) An evaluation for the need of overpressure relief devices shall be performed. The set pressure of a pressure relief device should be no more than the lesser of:

(1) the test pressure plus 345 kPa (50 psi), or

(2) 110% of the test pressure

(i) Consideration shall be given to proper disposal of the test water as it may contain residual traces of the system contents.

(j) Pressure testing should be completed prior to insulating. Welds or other joints that have previously been pressure tested can be insulated or otherwise covered when agreed to by the owner-user.

(k) Pressure testing should be completed prior to painting weld joints, unless the weld joints were previously tested. Documented test results indicate various types of paint will retain pressure during a pressure test when covering a through-wall "pin-hole." When considering whether or not welds may be painted prior to pressure testing, the following should be given consideration:

(1) the paint system(s) being used and their ability to mask a potential leak

(2) the probability that the process fluid(s) will act as a solvent on the paint system if a pin-hole is present, thus increasing the potential for a leak to occur

(3) the effect on nearby equipment or personnel if a leak occurs

(4) the cost of performing repairs in the field if such a failure occurs

(l) It is not required for the inspector approving the hydrostatic pressure test to be certified per SNT-TC-1A for Leak Testing or Visual Examination; however, the inspector should have the authority to stop a pressure test when deemed necessary to do so. Dedicated lines of communication should be in place between the inspector having oversight authority and all other personnel performing the pressure test.

(m) The test pressure of a hydrostatic pressure test of pressure vessels or heat exchangers shall be according to the original code of construction, considering also any subsequent engineering analysis as deemed necessary.

(n) When the requirements of the original code of construction are not available, the test pressure for a hydrostatic pressure test for pressure vessels or heat exchangers shall be the lesser of para. 6.1(n)(1) or 6.1(n)(2) below.

(1) Equation (1)

$$P_t = 1.3 \times P \times \frac{S_{at}}{S_{dt}} \quad (1)$$

where

P = maximum allowable working pressure from the Manufacturer's Data Report, or the value to which the vessel is being rerated

P_t = test pressure to be used, measured at the top of the vessel in its normal operating position

S_{at} = allowable stress at test temperature from the applicable code of construction for the material of which the component under consideration is constructed

S_{dt} = allowable stress at design temperature from the applicable code of construction for the material of which the component under consideration is constructed

S_{at}/S_{dt} = the ratio of allowable stresses; the lowest value shall be used in eq. (1) for all materials considered 1.3 is the test factor

(2) A pressure equal to that which results in an applied general primary membrane tensile stress equal to 90% the specified minimum yield stress at test temperature of carbon steel material, or 100% of austenitic steel material. Values for yield strengths for some materials are provided in ASME BPVC Section II, Part D.

(o) The test pressure for a hydrostatic pressure test for piping systems should be specified by the owner and shall be according to the original code of construction.

(p) When the requirements of the original code of construction are not available, the test pressure for a hydrostatic pressure test for piping systems should be specified by the owner and should be at least

$$P_t = 1.5 \times P \times \frac{S_{at}}{S_{dt}} \quad (2)$$

where

P = internal design pressure of the piping system

P_t = test pressure to be used, measured at the highest point of the piping system in its normal operating position

S_{at} = allowable stress at test temperature from the applicable code of construction for the material of which the component under consideration is constructed

S_{dt} = allowable stress at design temperature from the applicable code of construction for the material of which the component under consideration is constructed

S_{at}/S_{dt} = ratio of allowable stresses; the lowest value shall be used in eq. (2) for all materials considered 1.5 is the test factor.

The resulting stress due to test pressure, P_t, shall be limited to 100% of yield strength, S_Y.

(q) If the design pressure of the piping system cannot be verified, the value for P in eq. (2) may be the lesser of para. 6.1(q)(1) or 6.1(q)(2), normalized to the highest point of the piping system.

(1) The working pressure at design temperature for flanges in the piping system from ASME B16.5 or other applicable standard.

(2) The maximum allowable pressure calculated for the limiting component of the piping system.

(3) The test pressure should not exceed that which results in an applied general primary membrane tensile stress greater than 100% the specified minimum yield stress at test temperature. Yield strengths at ambient temperature may be found in ASME B31.3 or other applicable code of construction. Yield strengths at higher temperatures may be found in ASME BPVC Section II, Part D.

(r) Pressure testing of a piping system through equipment is not recommended. Piping may be tested with a pressure vessel if it is impractical to isolate the piping from the vessel, the test pressure of the piping is equal to or less than the test pressure of the vessel and the vessel and its supports will adequately support the weight of the test liquid.

If the test pressure of the piping exceeds the test pressure of the vessel, the vessel test pressure can be used, provided it is at least 77% of the piping test pressure; otherwise the piping should be isolated from the pressure vessel and pressure tested independently.

(s) Piping systems that operate at atmospheric pressure may be leak tested by filling with test liquid only.

(t) The items specified in paras. 6.1(t)(1) through 6.1(t)(9) should be considered when developing hydrostatic pressure test procedures for vessels or piping systems.

(1) All equipment and/or piping to be tested should be verified as being clean of dirt, weld slag, construction debris, or other unacceptable foreign matter.

(2) Items identified in para. 6.1(g) should be removed.

(3) All spring supports in vapor service lines should be protected with adequate travel stops to prevent overloading during the pressure test.

(4) Temporary supports should be provided for piping and/or piping supports that have not been designed to support the weight of the test liquid used for hydrostatic pressure test.

(5) The use of salt or brackish water should be avoided. Test water should be free from sediment and corrosive substances.

(6) The test water should be verified to be free of microbes. If an unacceptable level of microbes is in the water, it should be disinfected.

(7) Test water used for austenitic steel vessels or piping systems, or for components clad or overlaid with austenitic stainless steel, should be condensate, demineralized, or potable quality water with a verified chloride content of less than 50 ppm.

(8) Following a hold-time of a minimum of 10 min, the pressure should be reduced by 30% followed by a visual examination for evidence of leaks at locations such as flanges, weld joints, threaded connections, and any repaired locations.

(9) Test liquid should be drained immediately after completion of the hydrostatic test. Care should be exercised to provide proper venting to prevent the creation of internal negative pressure (vacuum) during draining.

(a) Pressure vessels and/or piping systems that will hold the test water for more than 10 days, whether or not the test liquid is pressurized, should be treated with a corrosion inhibitor and biocide. A corrosion engineer should be consulted.

(b) If further drying is necessary, the use of hot air or hot nitrogen should be considered.

(c) If complete drainage of austenitic stainless steel vessels and/or piping systems is not possible, the components should be flushed with low chloride (less than 5 ppm) water.

(10) After completion of the test, the vessel and/or piping system shall be restored to its operating condition. This includes, but is not limited to, paras. 6.1(t)(10)(a) through 6.1(t)(10)(f).

(a) All flanged joints blinded for pressure testing shall be reassembled with new gaskets and tightened per applicable specifications. Consideration shall be given to ASME PCC-1, *Guidelines for Pressure Boundary Bolted Flange Joint Assembly*.

(b) All strainers contained in the piping system should be removed, cleaned, and reinstalled.

(c) Temporary travel stops installed in spring supports should be removed.

(d) Vent and bleed connections that were installed for testing purposes only should be plugged using materials and methods per the applicable specification. Consideration shall be given to seal welding when necessary.

(e) Relief or safety valves that were isolated for the test shall have the isolating devices (e.g., gags, slip blinds, etc.) removed.

(f) Expansion joints that were locked to prevent damage during the pressure test shall be unlocked.

6.2 Pneumatic Pressure Test of Pressure Vessels or Piping

(a) When a hydrostatic pressure test cannot be performed per para. 6.1 (see para. 3.4.1), a pneumatic pressure test may be performed.

(b) Nitrogen should be the test medium since it cannot support combustion. Alternatively, clean, dry, oil-free air meeting the requirements of Class 1, 2, or 3 air per ISO 8573-1:2001, *Compressed Air — Part 1: Contaminants and Purity Classes*, should be used with a dew point ranging from −20°C to −70°C (−4°F to −94°F). Caution should be used when air is used in any system that cannot be verified as being free of hydrocarbons since this could result in the formation of an explosive mixture. When necessary, the design service fluid can be used for pneumatic pressure testing.

(c) The fabrication and in-service inspection records along with any necessary operational records should be reviewed prior to testing to determine if the pressure component/system has experienced a credible deterioration mechanism. Consideration should be given to how each mechanism could manifest itself.

(1) The inspection records should be reviewed for thinning beyond the specified limit. If thinning has occurred beyond the specified corrosion allowance, an engineering evaluation shall be performed.

(2) The component/system may have been damaged by mechanical means such as high vibration. Consideration should be given to inspecting the entire system prior to testing to look for evidence of damage.

(d) Components fabricated from brittle materials such as cast iron and ductile iron shall not be pneumatically pressure tested unless the following requirements are adhered to:

(1) the pressure test does not exceed MAWP

(2) additional NDE, such as Acoustic Emission (AE) testing, is performed along with the pressure test

(3) the procedures from para. 6.2.1 are followed

(e) The maximum calculated stored energy of any vessel or piping system being pneumatically pressure tested should not be greater than 271 000 000 J (200,000,000 ft-lb). If the calculated stored energy is greater than 271 000 000 J (200,000,000 ft-lb), then one of the following shall occur:

(1) The system shall be divided into smaller volumes such that each subsystem has a stored energy not greater than 271 000 000 J (200,000,000 ft-lb).

(2) A minimum distance shall be calculated per Mandatory Appendix III, eq. (III-1), and this distance shall be adhered to.

(3) A barricade per para. 6.2(g) shall be installed.

(f) A detailed hazard analysis should also be performed to evaluate the risk associated with the release of stored energy. See Mandatory Appendix IV for considerations relative to risk evaluation. Factors to consider in this analysis should include:

(1) any damage mechanisms identified by review of fabrication or in-service inspection records along with operational records

(2) the MDMT of the components being pressure tested, and its relative comparison to the test temperature to address the risk of brittle fracture

(3) the stress level of the system while undergoing a test

(4) the amount of nondestructive examination performed on welds that have not previously been subjected to a hydrostatic or pneumatic pressure test

(5) other simultaneous inspection methods being performed during the pressure test such as Acoustic Emission (AE) testing

(6) pressure wave from potential blast

(7) size of fragments resulting from failure of system and distance of travel

(g) For pressure tests where the risk of injury from potential fragments, shock waves, or other consequences of any pressurized system failure is determined to be unacceptable, a limited access area and pressure control point should be established. The minimum distance from the boundary of this area to the pressurized component should be calculated according to the procedure of Mandatory Appendix III.

When the spacing requirements described in Mandatory Appendix III are not achievable, consideration should be given to the design, fabrication, and installation of an alternative barricade capable of withstanding the blast of stored energy within the system. See also para. 6.2(e).

(h) Overpressure relief protection shall be provided. The set pressure of a pressure relief device should be not more than the greater of

(1) the test pressure plus 70 kPa (10 psi), or

(2) 110% of the test pressure

(i) The test pressure for a pneumatic pressure test for equipment shall be according to the original code of construction, considering also any subsequent engineering analysis as deemed necessary.

(j) If the requirements of the original code of construction are not available, the test pressure for a pneumatic pressure test for pressure vessels shall be

$$P_t = 1.1 \times P \times \frac{S_{at}}{S_{dt}} \quad (3)$$

where

P = maximum allowable working pressure from the Manufacturer's Data Report. If unknown, use the vessel's design or rated pressure.

P_t = test pressure to be used

S_{at} = allowable stress at test temperature from the applicable code of construction for the material of which the component under consideration is constructed

S_{dt} = allowable stress at design temperature from the applicable code of construction for the material of which the component under consideration is constructed

S_{at}/S_{dt} = ratio of allowable stresses; the lowest value shall be used in eq. (3) for all materials considered

1.1 = the test factor

(k) The test pressure for a pneumatic pressure test for piping systems shall be

$$P_t = 1.1 \times P \quad (4)$$

where

P = the internal design pressure of the piping system

P_t = the test pressure to be used

1:1 = the test factor

(l) The stored energy of the equipment or piping system under pneumatic pressure should be calculated and converted to equivalent pounds of TNT (Trinitrotoluene) using the equations shown in Mandatory Appendix II. The value calculated may be used for alternative safe distance calculations as per Mandatory Appendix III.

NOTE: The stored energy value of 271 000 000 J (200,000,000 ft-lb) is equivalent to an explosive energy of 127 lb of TNT. Risk evaluation may also be required; see Mandatory Appendix IV and para. 6.2(d).

6.2.1 Pneumatic Test Procedures. The items specified in paras. 6.2.1.1 through 6.2.1.5 (Steps 1 through 5) should be considered when developing pneumatic pressure test procedures for vessels or piping systems.

6.2.1.1 Step 1

(a) Raise pressure to the lesser of 170 kPa (25 psi) or 25% of test pressure.

(b) Block in supply and hold for 10 min.

(c) Visually inspect system for leaks.

(d) If leaks are discovered, release pressure, repair, and return to Step 1.

(e) If no leaks are discovered, proceed to Step 2.

6.2.1.2 Step 2. Gradually increase system pressure to 50% of the test pressure as follows:

(a) Increase from pressure in Step 1 by 350 kPa (50 psi) or to 35% test pressure, whichever is greater. Hold for a minimum of 3 min to allow strains to equalize. Continue to increase by 350 kPa (50 psi) increments until the system pressure is at 50% test pressure.

(b) Hold at 50% test pressure for a minimum of 10 min. Observe pressure gage for loss of system pressure. If pressure loss exceeds 10% of test pressure, the system pressure should be reduced to 25% test pressure and check for leaks.

(c) If no loss of pressure is detected, subject to approval of the inspector, proceed to Step 3.

6.2.1.3 Step 3

(a) Gradually increase system pressure in increments of 10% of test pressure. At each increment, block supply and observe pressure gage for 5 min.

If pressure loss is observed, reduce pressure to 25% test pressure and check for leaks. If necessary, release pressure and perform necessary repairs. Return to Step 1.

(b) Once full test pressure is reached, block supply and observe pressure gage for a minimum of 10 min.

(c) Reduce system pressure to the following applicable pressure:

(1) the test pressure divided by the test factor for vessels [see eq. (3)]. If there is no test factor available, use 4/5 test pressure.

(2) design pressure for piping.

6.2.1.4 Step 4

(a) Conduct a complete inspection for leakage of the vessel or piping system, or both, at locations such as flanges, weld joints, and threaded connections.

NOTE: It is assumed that the integrity of the pressurized system has been proven by para. 6.2.1.3(b) and the barricades required by para. 6.2(e) can be safely passed.

(b) If no leakage is discovered, release system pressure.

(c) If leakage that is not acceptable is discovered, relieve all system pressure and repair. Repeat Steps 2 and 3.

6.2.1.5 Step 5. After completion of the test, the vessel or piping system, or both, shall be restored to its design condition. This includes, but is not limited to, the following:

(a) All flanged joints blinded for pressure testing shall be reassembled with new gaskets and tightened per applicable specifications. Consideration should be give to ASME PCC-1 guidelines.

(b) Vent and bleed connections that were installed for testing purposes only should be plugged using materials and methods per the applicable specification. Consideration shall be given to seal welding when necessary.

6.3 Tightness Test

(a) A tightness test may be performed to detect leaks at various locations within a pressure system. It may be performed on systems that have previously been pressure tested, for closure welds of piping systems, on tube-to-tubesheet joints, and on systems exempted from hydrostatic or pneumatic testing. ASME Section V, Article 10 provides information on a variety of leak testing methods.

(b) A sensitive leak test per ASME B31.3 is the preferred method for conducting a tightness test.

(c) The applied test pressure for vessels and piping should not exceed 35% of the design pressure. However, leakage at flanged joints may be evident at much lower pressures when using sensitive leak detection methods; therefore, the minimum test pressure should be specified which enables the test sensitivity requirements to be met.

(d) Where the consequences of leakage of the process medium are acceptable, an in-service leak test may be performed as a tightness test using the process medium during the start-up of the system.

6.3.1 Pneumatic Tightness Test Procedures. The items specified in paras. 6.3.1(a) through 6.3.1(f) should be considered when developing pneumatic tightness test procedures for vessels or piping systems.

(a) Clean, dry, oil-free air should be used as the test medium, except in systems which cannot be verified as free from hydrocarbons. For this situation, nitrogen should be used as the test medium [see para. 6.2(b)].

(b) To minimize the stored energy of a system, the maximum test pressure should be not more than 35% of the design pressure of the vessel or piping system. The test pressure should be no less than the lesser of 105 kPa (15 psi) or 25% of the system design pressure.

(c) The system pressure should be gradually increased until the system pressure is the lesser of 170 kPa (25 psi) or 25% of the test pressure. Hold at this pressure long enough to conduct a preliminary inspection for leaks.

(d) System pressure should be gradually increased in increments of 10% of test pressure, holding for 30 sec to 1 min at each increment. Hold at final test pressure and complete a thorough inspection for leakage using the Gas and Bubble test method specified in ASME Section V, Article 10, or other method of equal or better sensitivity.

(e) If leakage is discovered and a joint needs to be tightened, reduce system pressure to the lesser of 50% of test pressure or 170 kPa (25 psi) and tighten.

(f) After completion of the test, the vessel and/or piping system shall be restored to its operating condition.

7 REFERENCES

API RP 571, Damage Mechanisms Affecting Fixed Equipment in the Process Industry
API RP 579, Fitness-for-Service
API RP 580, Risk Based Inspection

Publisher: American Petroleum Institute (API), 1220 L Street, NW, Washington, DC 20005-4070.

ASME Boiler and Pressure Vessel Code, Section II, Part D — Properties
ASME Boiler and Pressure Vessel Code, Section V — Nondestructive Examination
ASME Boiler and Pressure Vessel Code, Section VIII, Division 1 — Unfired Pressure Vessels
ASME B16.5, Pipe Flanges and Flanged Fittings
ASME B31.3, Process Piping. See also Appendix F therein for considerations of damage mechanisms.
ASME PCC-1, Guidelines for Pressure Boundary Bolted Flange Joint Assembly
ASME PTC 19.2, Pressure Measurement, Instruments and Apparatus

Publisher: The American Society of Mechanical Engineers (ASME), Three Park Avenue, New York, NY 10016-5990; Order Department: 22 Law Drive, P.O. Box 2300, Fairfield, NJ 07007-2300

Recommended Practice SNT-TC-1A

Publisher: American Society for Nondestructive Testing (ASNT), 1711 Arlingate Lane, P.O. Box 28518, Columbus, OH 43228-0518

"NDT Solution: Worried About Leaks? Don't Paint Before Hydrotesting," Jon E. Batey, Materials Evaluation, Volume 51, Number 9, September 1993, pp. 980-982.

Welding Research Council Bulletin 490, Damage Mechanisms Affecting Fixed Equipment in the Fossil Electric Power Industry, Jonathan D. Dobis and David N. French; July 2, 2004.

Welding Research Council Bulletin 488, Damage Mechanisms Affecting Fixed Equipment in the Pulp and Paper Industry, Jonathan D. Dobis and David C. Bennet, July 2, 2004.

Welding Research Council Bulletin 489, Damage Mechanisms Affecting Fixed Equipment in the Refining Industry, Jonathan D. Dobis, J. E. Cantwell and Martin Prager, July 2, 2004.

Publisher: Welding Research Council (WRC), P.O. Box 201547, Shaker Heights, OH 44120

Article 5.1, Mandatory Appendix I
Pressure/Leak Testing

Begins on next page.

Test Record

Location:	System / test number:
Equipment identification:	Applicable code:
Test type: ☐ Hydrostatic ☐ Pneumatic ☐ Combination hydro-pneumatic ☐ Sensitive leak ☐ In-Service ☐ Other (specify)	
Test media:	Req'd test pressure:

Dwg / Rev. No.	Item ID / Equip No. / Line No.	Standard / Specification	Test Boundaries (Partial Test Only)	
			From:	To:

Pretest Inspection Checklist (to be completed by Inspection Representative)		N/A	Satisfactory (Initial / Date)	Unsatisfactory (Initial / Date)
1	Approved test media source(s) identified / located			
2	Chloride content of water verified < 50 ppm (Stainless and High Alloy Steels)			
3	Items not to be subjected to test pressure have been isolated from test (e.g., control valves, instruments, etc.)			
4	Equipment / piping is properly supported, stops installed in spring supports			
5	Blinds are proper size / thickness for pressure and correctly located / installed			
6	All deviations to test procedures / codes / standards have been approved and copies of approvals attached			
7	Pressure gage/recorder ranges are > 1.5 and < 4 times the req'd test pressure			
8	Required overpressurization protection devices have been installed			
9	All required welding and NDE has been completed			
10	Temperature of equipment and test media stabilized and minimum test temperature verified			

Date tested:	Ambient temp.:	Metal temp.:
Gage / recorder nos. and calibration due dates:		
Actual test pressure:	Test duration (hold time)	

Test accepted:

QC Representative / Company	Owner Representative

Test system drained / flushed upon completion of testing: ☐ Not applicable

Fabricator Representative / Company	Owner Representative

Remarks: _____

Article 5.1, Mandatory Appendix II
Stored Energy Calculations for Pneumatic Pressure Test

The stored energy of the equipment or piping system should be calculated and converted to equivalent kilograms (pounds) of TNT (Trinitrotoluene) using the following equations:

$$E = \left[1/(k-1)\right] \times P_{at} \times V \left[1 - (P_a/P_{at})^{[(k-1)/k]}\right] \quad \text{(II-1)}$$

where
E = stored energy, J (ft-lb)
k = ratio of specific heat for the test fluid
P_a = absolute atmospheric pressure, 101 kPa (14.7 psia)
P_{at} = absolute test pressure, Pa (psia)
V = total volume under test pressure, m^3 (ft^3)

When using air or nitrogen as the test medium ($k = 1.4$), this equation becomes

$$E = 2.5 \times P_{at} \times V \left[1 - (P_a/P_{at})^{0.286}\right] \quad \text{(II-2)}$$

and

$$\text{TNT} = \frac{E}{4266920} \text{ (kg)} \quad \text{(II-3)}$$

where
E = stored energy, J
P_a = absolute atmospheric pressure, 101 000 Pa
P_{at} = absolute test pressure, Pa
V = total volume under test pressure, m^3

For U.S. Customary units using air or nitrogen as the test medium ($k = 1.4$), this equation becomes

$$E = 360 \times P_{at} \times V \left[1 - (P_a/P_{at})^{0.286}\right] \quad \text{(II-4)}$$

and

$$\text{TNT} = \frac{E}{1488617} \text{ (lb)} \quad \text{(II-5)}$$

where
E = stored energy, ft-lb
P_a = absolute atmospheric pressure, 14.7 psia
P_{at} = absolute test pressure, psia
V = total volume under test pressure, ft^3

See also paras. 6.2(e) and 6.2(f) of Article 5.1.

Article 5.1, Mandatory Appendix III
Safe Distance Calculations for Pneumatic Pressure Test

The minimum distance between all personnel and the equipment being tested shall be the greater of

(a) the following:

(1) R = 30 m for $E \le 135\,500\,000$ J

(2) R = 60 m for 135 500 000 J < $E \le 271\,000\,000$ J

(3) R = 100 ft for $E <$ 100,000,000 ft-lb

(4) R = 200 ft for 100,000,000 < $E \le$ 200,000,000 ft-lb

(b) the following equation:

$$R = R_{\text{scaled}}\,(\text{TNT})^{1/3} \qquad \text{(III-1)}$$

where

E = stored energy as calculated by eq. (II-1) or (II-2)

R = actual distance from equipment

R_{SCALED} = scaled consequence factor; value for eq. (III-1) shall be 20 m/kg$^{1/3}$ (50 ft/lb$^{1/3}$) or greater

TNT = energy measured in TNT, kg (lb), determined from eq. (II-3) or (II-5)

Table III-1

R_{SCALED}, m/kg$^{1/3}$	R_{SCALED}, ft/lb$^{1/3}$	Biological Effect	Structural Failure
20	50	. . .	Glass windows
12	30	Eardrum rupture	Concrete block panels
6	15	Lung damage	Brick walls
2	5	Fatal	. . .

For systems where $E >$ 271 000 000 J (200,000,000 ft-lb), the required distance shall be calculated by eq. (III-1).

If the minimum calculated distance cannot be obtained, an alternative value for R_{SCALED} may be chosen based on Table III-1 for use in eq. (III-1). See also para. 6.2(g).

For example, to prevent lung damage, the distance a person is from the equipment should result in an R_{SCALED} value of more than 6 m/kg$^{1/3}$ (15 ft/lb$^{1/3}$). Note the structural damage that can occur, which shall be considered.

Article 5.1, Mandatory Appendix IV
Risk Evaluation Considerations for Pneumatic Pressure Test

When considering the risk analysis factors listed in para. 6.2(f), it should be remembered that risk is a two-dimensional combination of probability (or likelihood) and consequence. Risk is the measure of the potential for harm or loss (i.e., hazard) that reflects the likelihood (or frequency) and severity of an adverse effect to health, property, or the environment. If probability and consequence are defined quantitatively (i.e., numerical values are assigned), risk is the product.

$$\text{Risk} = \text{Probability} \times \text{Consequence} \qquad \text{(IV-1)}$$

In a qualitative assessment, a matrix is typically used to combine probability and consequence. Consideration should be given to the level of risk that is acceptable when performing pneumatic tests. Reference API RP 580 for use of risk assessment in determining the acceptable levels of risk associated with pneumatic testing.

In reviewing eq. (IV-1), it is clear that even though the consequence may be significant, if the probability is very low, the risk may become acceptable. For example, the consequence of an airliner crashing is significant in that it will most likely result in serious injury or death to the passengers along with major damage or total loss of the aircraft. However, the probability of the airliner crashing is very low; thus, the public accepts the risk associated with airline travel.

Risk considerations can be applied to pneumatic testing also. Examples may include

(a) a new austenitic stainless steel piping system that has been hydrostatically tested during shop fabrication with the exception of four final field assembly circumferential butt welds. The piping system has a total volume that results in an energy level greater than 271 000 000 J (200,000,000 ft-lb); however, it is not feasible to separate the piping system into smaller sections for testing, nor is it feasible to install blast barriers. By performing volumetric examination such as UT or RT and determining the field welds are free of rejectable indications, the risk associated with a full pneumatic pressure test of this system may be deemed acceptable.

(b) an existing carbon steel vessel with an MDMT rating of −45°C (−50°F) into which a new nozzle had been installed following all requirements of the original Code of Construction. The vessel has a total volume that results in an energy level greater than 271 000 000 J (200,000,000 ft-lb); however, it is still desired to perform a pressure test to check the integrity of the weld and obtain the other benefits of pressure testing. It is not feasible to install blast barriers. By performing volumetric examination such as UT on the nozzle attachment weld and determining the weld is free of rejectable indications, along with verification by inspection that the vessel is in a like-new condition, the risk associated with a full pneumatic pressure test of this vessel may be deemed acceptable.

(08)

Article 5.2
Nondestructive Examination in Lieu of Pressure Testing for Repairs and Alterations

1 DESCRIPTION

1.1 Background

This Article provides alternatives to pressure testing after repairs or alterations. A pressure test in itself is a useful tool with respect to newly constructed equipment. Application of a pressure test, to equipment that has been in service for some time, is a matter that requires careful consideration of a variety of factors involved. There are instances where the application of a pressure test is not desirable, such as, the application of a pressure test may create damage.

1.2 Application

This Article applies to equipment for which

(a) NDE provides better assurance of integrity in future operation for elevated temperature or cyclic operation where crack initiation and propagation is a concern. Large flaws may not result in failure during a pressure test but may propagate in cyclic or creep service.

(b) a pressure test is not practical and NDE can be shown to provide appropriate integrity assurance. A pressure test of equipment that has been repaired is primarily a leak test, or, in some cases, a test for gross fabrication flaws that could compromise structural integrity. Structural integrity of the design is usually not an issue for repairs. Even for most alterations, the integrity of the design can be verified by engineering analysis.

(c) a pressure test is practical, but NDE can be shown to provide equivalent integrity assurance. In this case, overall cost may be a major consideration. It is essential that the appropriate NDE be performed based on the damage mechanisms anticipated during repairs or alterations.

1.3 Pressure Testing

Pressure testing consists of three primary methods.

(a) Hydrostatic Test. The fluid used is typically water; however, another suitable liquid can be substituted if there is a risk of damage due from any adverse effects of having water in the system.

(b) Pneumatic Test. This is performed in some situations where the presence of any water or weight of the water in the system is an issue. The pneumatic test is potentially hazardous due from the stored energy of the compressed gas.

(c) Hydro-Pneumatic Test. This is a combination of the two other test methods. Article 5.1 should be referred for pressure testing issues and precautions.

1.4 Nondestructive Examination (NDE)

NDE has been defined as comprising those examination methods (see Mandatory Appendix I) used to examine an object, material, or system without impairing its future usefulness. It is used to investigate the material and component integrity.

Determining the structural integrity of a pressure-retaining device or component can be accomplished by a process involving a quantitative engineering evaluation coupled with NDE to obtain current wall thicknesses and provide detection and sizing of any in-service flaws or cracks (National Board Bulletin, Volume 61).

1.5 Pressure Test

1.5.1 Reasons for Pressure Testing in New Construction

(a) Checks for leakage of mechanical and welded joints

(b) May avoid an in-service failure and associated safety issues

(c) Screens out gross design, material, fabrication deficiencies

(d) Reduces the stress-multiplying capability of sharp notches, metallurgical defects, discontinuities (flaw tip blunting)

(e) Provides mechanical stress relief

(f) Also refer to Article 5.1, para. 3.2 of this document

1.6 NDE Methods

The following is a limited list of the more common alternative NDE methods. Mandatory Appendix I contains a table that compares NDE methods, properties sensed or measured, typical discontinuities detected, representative applications, advantages, and limitations. Refer to section 5 of this Article for examination requirements.

1.6.1 Alternative NDE Methods: Volumetric

(a) Radiography

(b) Ultrasonic Shear-wave

(c) Automated Ultrasonics, such as time-of-flight-diffraction (TOFD) and Phased Array

1.6.2 Alternative NDE Methods: Surface

(a) Magnetic Particle
(b) Liquid Penetrant
(c) Eddy Current
(d) Magnetic Flux Leakage

1.7 Brittle Fracture Risk

Performing pressure tests of an in-service device or component with inadequate fracture toughness could result in brittle fracture. Once a device or component has been subjected to a one-time (at new construction) hydrostatic test, any additional hydrostatic tests over the life of the component will serve minimal useful purpose regarding structural integrity or benefits of redistribution of stresses. In addition, performing a hydrostatic test above the normal working pressure of an in-service component can result in significant exposure to brittle fracture — especially if the material of construction has been subjected to some degree of embrittlement under normal service conditions or possesses poor fracture toughness as a result of steel melting practices or contains an undetected critical flaw from in-service exposure or will be pressure tested below the DTB transition temperature of any component.

2 LIMITATIONS

2.1 Alternative Requirements: Part 1 of ASME PCC-2

Part 1 of this Standard, Scope, Organization, and Intent, contains additional requirements and limitations. This Article shall be used in conjunction with Part 1.

2.2 Repaired or Altered Pressure Equipment

The terms "repaired" and "altered" are as defined in the National Board Inspection Code (NBIC), ANSI/NB-23 Appendix 4, or API 510 and API 570 for pressure vessels and piping.

2.3 Examples Where Pressure Test May Be Inadvisable

2.3.1 Foundation or Support Structure. Where the foundation or supporting structure has not been designed to carry the weight of liquid filled pressure equipment.

2.3.2 Undesirable Reactions or Consequences. A safety concern where the application of test fluids could lead to an undesirable reaction with the residue of fluids contained in the pressure equipment.

2.3.3 Design Reasons

(a) Where the design of the pressure equipment is based on other factors, such as bending where stresses due to pressure may not be governing

(b) Where a vessel for which the thickness of the pressure boundary components is governed by external pressure (buckling) considerations

2.3.4 Painting/Coating/Lining Issues. Where painting/coating/lining could mask leaks that would otherwise have been detected during a pressure test. Also includes damage to refractory or other insulating internal materials, and damage to internal linings.

2.4 Repairs and Alterations for Which Pressure Testing is Not Normally Required (ANSI/NB-23)

The following types of repairs and/or alterations may be exempt from pressure testing or where pressure tests may be optional depending upon the needs of the owner-user:

(a) welding or brazing that does not penetrate the pressure boundary at any point
(b) seal welds
(c) cladding application/repairs
(d) hard surfacing
(e) welding to flange seating surfaces, when less than 50% of the axial thickness is replaced by welding
(f) tube-to-tubesheet welds provided less than 10% of the total number of tubes are replaced at any time after a full operational cycle
(g) tube plugging or sleeving of heat exchangers, steam generators, or boiler tubes
(h) hot tap fittings

3 DESIGN

See para. 2.3.3 of this Article.

4 FABRICATION (REPAIR OR ALTERATION)

Not applicable to this Article.

5 EXAMINATION — NONDESTRUCTIVE EXAMINATION (NDE)

The specific type and amount of surface and/or volumetric NDE that should be specified in lieu of pressure testing is at the owner-user's discretion, the extent of which should be based on the risk of leak or failure of the equipment. The NDE specified needs to match the likelihood of the type of defects that could occur with the particular materials and welding methods in use. See para. 1.6 for the more common NDE methods generally employed in lieu of pressure testing.

6 TESTING

Not applicable to this Article.

7 REFERENCES

ANSI/NB-23-2007, National Board Inspection Code

Publisher: American National Standards Institute (ANSI), 25 West 43rd Street, New York, NY 10036

API 510-2006, Pressure Vessel Inspection Code: Maintenance Inspection, Rating, Repair, and Alteration

API 570, In-Service Inspection Code for Process Piping

Publisher: American Petroleum Institute (API), 1220 L Street NW, Washington, DC 20005-4070

ASME Boiler and Pressure Vessel Code, 2007 Edition, Section IV, Heating Boilers

ASME Boiler and Pressure Vessel Code, 2007 Edition, Section V, Nondestructive Examination

ASME Boiler and Pressure Vessel Code, 2007 Edition, Section VIII, Division 1 — Rules for Construction of Pressure Vessels

ASME Boiler and Pressure Vessel Code, 2007 Edition, Section IX, Qualification Standard for Welding and Brazing Procedures, Welders, Brazers, and Welding and Brazing Operators

ASME Boiler and Pressure Vessel Code, 2007 Edition, Code Case 2235

Publisher: The American Society of Mechanical Engineers (ASME), Three Park Avenue, New York, NY 10016-5990; Order Department: 22 Law Drive, P.O. Box 2300, Fairfield, NJ 07007-2300

Recommended Practice SNT-TC-1A

Publisher: American Society for Nondestructive Testing (ASNT), 1711 Arlingate Lane, P.O. Box 28518, Columbus, OH 43228-0518

Galanes, George, "Pressure Testing: Fact and Fiction," National Board Bulletin, Volume 61, Number 3, Fall 2006

Article 5.2, Mandatory Appendix I
Comparison of Selected NDE Methods

Begins on next page.

Table I-1

Method	Properties Sensed or Measured	Typical Discontinuities Detected	Representative Applications	Advantages	Limitations
X- and gamma-ray radiography	Changes in density from voids, inclusions, material variations, and placement of internal parts	Voids, porosity, inclusions, incomplete penetration, and cracks	Castings, forgings, weldments, and assemblies	Detects internal discontinuities; useful on a wide variety of materials; portable; permanent record	Cost; relative insensitivity to thin or laminar flaws such as fatigue cracks or delaminations that are perpendicular to the radiation beam; health hazard
Liquid penetrant examination	Surface openings	Cracks, porosity, laps, and seams	Castings, forgings, weldments, metallic and nonmetallic components	Inexpensive; easy to apply; portable	Discontinuity must be open to an accessible surface; false indication often occurs
Eddy current examination	Changes in electrical and magnetic properties caused by surface and near-surface discontinuities	Cracks, laps, seams, voids, and variations in alloy composition and heat treatment	Bars, rods, wire, tubing, local regions of sheet metal, alloy sorting, and thickness gaging	Moderate cost; readily automated; portable; permanent record, if needed	Conductive materials only; shallow penetration; geometry sensitive; reference standards necessary
Microwave examination	Anamolies in complex dielectric coefficient; surface anamolies in conductive materials	In dielectrics; disbands voids, and cracks; in metal surfaces; surface cracks	Glass-fiber-resin structures; plastics; ceramics; moisture content; thickness measurement	Noncontacting; readily automated; rapid inspection	No penetration of metals; comparatively poor definition of flaws
Magnetic particle examination	Leakage in magnetic flux field caused by surface or near-surface discontinuities	Surface or near-surface cracks, laps, voids, and nonmetallic inclusions	Ferromagnetic products such as weldments, castings, forgings, and extrusions, and other basic steel products	Stable; inexpensive	Ferromagnetic materials only; surface preparation may be required; false indications often occur
Magnetic flux leakage examination	Leakage in magnetic flux caused by surface or near-surface discontinuities	Surface or near-surface cracks, laps, voids, and nonmetallic inclusions	Ferromagnetic products such as weldments, castings, forgings, and extrusions, and other basic steel products	Sensitivity to typical discontinuities; readily automated; moderate depth penetration; permanenet record, if needed	Ferromagnetic materials only; proper magnetization of part sometimes difficult when parts do not have uniform cross sections
Ultrasonic examination	Changes in acoustic impedance	Cracks, voids, porosity, lamination, delaminations and inclusions	Weldments, plates, tubes, castings, forgings, extrusions; thickness gaging	Excellent penetration; readily automated; good sensitivity and good resolution; requires access to only one side, permanent record, if needed	Requires acoustic coupling to surface; reference standard required; highly dependent upon operator skill; relative insensitivity to laminar flaws which are parallel to the sound beam

Table I-1 (Cont'd)

Method	Properties Sensed or Measured	Typical Discontinuities Detected	Representative Applications	Advantages	Limitations
Sonic examination	Changes in acoustic impedance	Disbands, delaminations, cracks, or voids	Laminated structures; honeycomb; small parts	Simple to implement; readily automated; portable	Geometry sensitive; poor definition
Ultrasonic holography	Same as ultrasonic examination	Used primarily for evaluation of discontinuities detected by other methods	Examination of a limited region of the structure in each image	Produces a viewable image of discontinuities	Cost; limited to small regions of the structure; poor definition compared to radiography
Infrared testing	Surface temperature; anomolies in thermal conductivity or surface emissivity, or both	Voids or disbands in nonmetallics; location of hot or cold spots in thermally active assemblies	Laminated structures; honeycomb; electric and electronic circuits; insulated structures; refractory-lined structures and machinery	Produces a viewable thermal map	Cost; difficult to control surface emissivity; poor definition
Strain gages	Mechanical strains	Not used for detection of discontinuities	Stress–strain analysis of most materials	Low cost; reliable	Insensitive to preexisting strains; small area coverage; requires bonding to surface
Brittle coatings	Mechanical strains	Not commonly used for detection of discontinuities	Stress–strain analysis of most materials	Low cost; produces large area map of strain field	Insensitive to preexisting strains
Optical holography	Mechanical strains	Disbands; delaminations; plastic deformation	Honeycomb; composite structure; tires; precision parts such as bearing elements	Extremely sensitive, produces a map of strain field; permanent record, if needed	Cost; complexity; requires considerable skill
Acoustic emission	Stress wave energy generated by growing flaws, areas of high stress, leaks	Cracks, structural anomolies, leaks, also delamination, fiber fracture, and matrix failure in composite materials	Crack detection and location during proof testing crack propagation, composite, structures,metal structures, rotating equipment	100% volumetric examination in real time, complicated geometries, very high sensitivity, permanent record, accurate flaw location	Structure must be loaded, to a higher level than previous service loadings, sensors must be in contact with structure

INTENTIONALLY LEFT BLANK

ASME PCC-2–2008

ISBN-13: 978-0-7918-3160-1
ISBN-10: 0-7918-3160-4

9 780791 831601

A17508