Specification for Pipeline and Piping Valves

API SPECIFICATION 6D
TWENTY-FOURTH EDITION, AUGUST 2014

EFFECTIVE DATE: AUGUST 1, 2015

AMERICAN PETROLEUM INSTITUTE

Provided by IHS
No reproduction or networking permitted without license from IHS

Licensee=ISATIS Group http://st2014.ir
Not for Resale, 10/27/2014 05:55:32 MDT

Special Notes

API publications necessarily address problems of a general nature. With respect to particular circumstances, local, state, and federal laws and regulations should be reviewed.

Neither API nor any of API's employees, subcontractors, consultants, committees, or other assignees make any warranty or representation, either express or implied, with respect to the accuracy, completeness, or usefulness of the information contained herein, or assume any liability or responsibility for any use, or the results of such use, of any information or process disclosed in this publication. Neither API nor any of API's employees, subcontractors, consultants, or other assignees represent that use of this publication would not infringe upon privately owned rights.

API publications may be used by anyone desiring to do so. Every effort has been made by the Institute to assure the accuracy and reliability of the data contained in them; however, the Institute makes no representation, warranty, or guarantee in connection with this publication and hereby expressly disclaims any liability or responsibility for loss or damage resulting from its use or for the violation of any authorities having jurisdiction with which this publication may conflict.

API publications are published to facilitate the broad availability of proven, sound engineering and operating practices. These publications are not intended to obviate the need for applying sound engineering judgment regarding when and where these publications should be utilized. The formulation and publication of API publications is not intended in any way to inhibit anyone from using any other practices.

Any manufacturer marking equipment or materials in conformance with the marking requirements of an API standard is solely responsible for complying with all the applicable requirements of that standard. API does not represent, warrant, or guarantee that such products do in fact conform to the applicable API standard.

Users of this Specification should not rely exclusively on the information contained in this document. Sound business, scientific, engineering, and safety judgment should be used in employing the information contained herein.

All rights reserved. No part of this work may be reproduced, translated, stored in a retrieval system, or transmitted by any means, electronic, mechanical, photocopying, recording, or otherwise, without prior written permission from the publisher. Contact the Publisher, API Publishing Services, 1220 L Street, NW, Washington, DC 20005.

Copyright © 2014 American Petroleum Institute

Provided by IHS
No reproduction or networking permitted without license from IHS

Licensee=ISATIS Group http://st2014.ir
Not for Resale, 10/27/2014 05:55:32 MDT

Foreword

Nothing contained in any API publication is to be construed as granting any right, by implication or otherwise, for the manufacture, sale, or use of any method, apparatus, or product covered by letters patent. Neither should anything contained in the publication be construed as insuring anyone against liability for infringement of letters patent.

Shall: As used in a standard, “shall” denotes a minimum requirement in order to conform to the specification.

Should: As used in a standard, “should” denotes a recommendation or that which is advised but not required in order to conform to the specification.

This document was produced under API standardization procedures that ensure appropriate notification and participation in the developmental process and is designated as an API standard. Questions concerning the interpretation of the content of this publication or comments and questions concerning the procedures under which this publication was developed should be directed in writing to the Director of Standards, American Petroleum Institute, 1220 L Street, NW, Washington, DC 20005. Requests for permission to reproduce or translate all or any part of the material published herein should also be addressed to the director.

Generally, API standards are reviewed and revised, reaffirmed, or withdrawn at least every five years. A one-time extension of up to two years may be added to this review cycle. Status of the publication can be ascertained from the API Standards Department, telephone (202) 682-8000. A catalog of API publications and materials is published annually by API, 1220 L Street, NW, Washington, DC 20005.

Suggested revisions are invited and should be submitted to the Standards Department, API, 1220 L Street, NW, Washington, DC 20005, standards@api.org.

Provided by IHS
No reproduction or networking permitted without license from IHS
Licensee=ISATIS Group http://st2014.ir
Not for Resale, 10/27/2014 05:55:32 MDT

--`,`,```,`,,,,,``,,,`,``,`,`,-`-`,,`,,`,`,,`---

Provided by IHS
No reproduction or networking permitted without license from IHS

Licensee=ISATIS Group http://st2014.ir
Not for Resale, 10/27/2014 05:55:32 MDT

Contents

Page

1 Scope . . . 1
1.1 General . . . 1
1.2 Conformance . . . 1
1.3 Conformance with Specification . . . 1
1.4 Processes Requiring Validation . . . 1

2 Normative References . . . 2

3 Terms, Definitions, Acronyms, Abbreviations, Symbols, and Units . . . 4
3.1 Terms and Definitions . . . 4
3.2 Acronyms and Abbreviations . . . 9
3.3 Symbols and Units . . . 9

4 Valve Types and Configurations . . . 10
4.1 Valve Types . . . 10
4.2 Valve Configurations . . . 10

5 Design . . . 12
5.1 Design Standards and Calculations . . . 12
5.2 Pressure and Temperature Rating . . . 12
5.3 Sizes . . . 13
5.4 Face-to-face and End-to-end Dimensions . . . 13
5.5 Valve Operation . . . 14
5.6 Pigging . . . 14
5.7 Valve Ends . . . 14
5.8 Valve Cavity Pressure Relief . . . 15
5.9 Drains . . . 16
5.10 Injection Points . . . 16
5.11 Drain, Vent, and Sealant Lines . . . 17
5.12 Drain, Vent, and Sealant Valves . . . 17
5.13 Handwheels and Wrenches—Levers . . . 17
5.14 Locking Provision . . . 18
5.15 Position of the Obturator . . . 18
5.16 Position Indicators . . . 18
5.17 Travel Stops . . . 18
5.18 Actuator, Operators, and Stem Extensions . . . 18
5.19 Lifting . . . 19
5.20 Drive Trains . . . 19
5.21 Stem Retention . . . 20
5.22 Fire Type-testing . . . 20
5.23 Antistatic Device . . . 20

6 Materials . . . 20
6.1 Material Specification . . . 20
6.2 Tensile Test Requirements . . . 20
6.3 Service Compatibility . . . 21
6.4 Forged Parts . . . 21
6.5 Composition Limits . . . 21
6.6 Toughness Test Requirements . . . 21
6.7 Bolting . . . 22
6.8 Sour Service . . . 22

Provided by IHS
No reproduction or networking permitted without license from IHS
Licensee=ISATIS Group http://st2014.ir
Not for Resale, 10/27/2014 05:55:32 MDT

Contents

Page

6.9 Drain Connections . . . 23
6.10 Heat-treating Equipment Qualification . . . 23

7 Welding . . . 23
7.1 Welding Consumables . . . 23
7.2 Welding Procedure and Welder/Welding Operator Qualifications . . . 23
7.3 Impact Testing . . . 24
7.4 Hardness Testing . . . 24
7.5 Repair . . . 25
7.6 Repair of welds . . . 26

8 Quality Control . . . 26
8.1 NDE Requirements . . . 26
8.2 Measuring and Test Equipment . . . 26
8.3 Qualification of Personnel . . . 27
8.4 NDE of Repairs . . . 27
8.5 Weld End NDE . . . 28
8.6 Visual Inspection of Castings . . . 28
8.7 Quality Specification Levels (QSLs) . . . 28

9 Pressure Testing . . . 28
9.1 General . . . 28
9.2 Stem Backseat Test . . . 29
9.3 Hydrostatic Shell Test . . . 29
9.4 Hydrostatic Seat Test . . . 30
9.5 Check Valves . . . 32
9.6 Testing of Drain, Vent, and Sealant Injection Lines . . . 32
9.7 Draining . . . 32

10 Coating/Painting . . . 32

11 Marking . . . 32

12 Preparation for Shipment . . . 34

13 Documentation . . . 35
13.1 Minimum Documentation and Retention . . . 35
13.2 Documentation Provided with the Valve(s) . . . 36

14 Facility Requirements . . . 36
14.1 Minimum Facility Requirements for the Assembler Category of Manufacturing . . . 36
14.2 Activities Applicable to an Assembler Facility . . . 36

Annex A (informative) **API Monogram Program Use of the API Monogram by Licensees** . . . 37

Annex B (informative) **Valve Configurations** . . . 41

Annex C (normative) **Valve End-to-end and Face-to-face Dimensions** . . . 56

Annex D (informative) **Guidance for Travel Stops by Valve Type** . . . 76

Annex E (informative) **API 20 Series Supply Chain Management** . . . 77

Annex F (normative) **Qualification of Heat-treating Equipment** . . . 78

Annex G (normative) **Requirements for Nondestructive Examination** . . . 81

Provided by IHS
No reproduction or networking permitted without license from IHS
Licensee=ISATIS Group http://st2014.ir
Not for Resale, 10/27/2014 05:55:32 MDT

Contents

Page

Annex H (normative) **Supplementary Test Requirements** 85

Annex I (informative) **Requirements for Extended Hydrostatic Shell Test Duration and Records Retention for Valves in Jurisdictional Pipeline Systems** 90

Annex J (normative) **Quality Specification Level (QSL) for Pipeline Valves**. 92

Annex K (informative) **Isolation Valve Features** 97

Annex L (normative) **External Coating for End Connections** 100

Annex M (informative) **Marking Example** 102

Annex N (informative) **Supplementary Documentation Requirements** 103

Annex O (informative) **Purchasing Guidelines** 104

Bibliography 108

Figures

1 Typical Flange Dimensions 15
2 Bolt-hole Misalignment 16
3 Charpy V-notch Weld Metal Specimen Location 25
4 Charpy V-notch Heat-affected Zone Specimen Location 25
5 Typical Identification Plate for a Valve with One Seat Unidirectional and One Seat Bidirectional 34
B.1 Expanding-gate/Rising-stem Gate Valve 42
B.2 Slab-gate/Through-conduit Rising-stem Gate Valve 43
B.3 Plug Valve 44
B.4 Top-entry Trunnion Mounted Ball Valve 45
B.5 Three-piece Trunnion Mounted Ball Valve 46
B.6 Welded-body Trunnion Mounted Ball Valve 47
B.7 Reduced-opening Swing Check Valve 48
B.8 Full-opening Swing Check Valve 49
B.9 Single-plate Wafer-type Check Valve, Long Pattern 50
B.10 Typical Dual-plate Wafer-type Check Valve, Long Pattern 51
B.11 Single-plate Wafer-type Check Valve, Short Pattern 52
B.12 Axial Flow Check Valve 53
B.13 Piston Check Valve 54
B.14 Floating Ball Valve 55
F.1 Thermocouple Location—Rectangular Furnace (Working Zone) 78
F.2 Thermocouple Locations—Cylindrical Furnace (Working Zone) 79
K.1 Block and Bleed—Type A 97
K.2 Block and Bleed—Type B 97
K.3 Double Block and Bleed—Type A 98
K.4 Double Block and Bleed—Type B 98
K.5 Double Isolation and Bleed—Type A 98
K.6 Double Isolation and Bleed—Type B 98
L.1 Raised Face 100
L.2 Ring Type Joint or Raised Face Ring Type Joint 101
L.3 Weld End 101
L.4 Pipe Pup Weld Ends 101

Provided by IHS
No reproduction or networking permitted without license from IHS
Licensee=ISATIS Group http://st2014.ir
Not for Resale, 10/27/2014 05:55:32 MDT

Contents

Page

Tables

1 Minimum Bore for Full-opening Valves . . . 11
2 Thread/Pipe Sizes for Drains . . . 17
3 Minimum V-notch Impact Requirements (Full-size Specimen) . . . 22
4 Minimum Duration of Stem Backseat Tests . . . 29
5 Minimum Duration of Hydrostatic Shell Tests . . . 30
6 Minimum Duration of Seat Tests . . . 30
7 Valve Marking . . . 33
8 Minimum Facility Requirements . . . 36
C.1 Gate Valves—Face-to-face (A) and End-to-end (B and C) Dimensions . . . 57
C.2 Plug Valves—Face-to-face (A) and End-to-end (B and C) Dimensions . . . 61
C.3 Ball Valves—Face-to-face (A) and End-to-end (B and C) Dimensions . . . 67
C.4 Check Valves, Full-opening and Reduced Types—Face-to-face (A) and End-to-end (B and C) Dimensions . . . 72
C.5 Single- and Dual-plate, Long- and Short-pattern, Wafer-type Check Valves—Face-to-face Dimensions . . . 75
D.1 Valve Travel Stops . . . 76
H.1 Minimum Duration of Pneumatic Shell and Seat Tests . . . 86
J.1 NDE Requirements . . . 92
J.2 Extent, Method, and Acceptance Criteria of NDE/Item Examination Code . . . 94
J.3 Additional Pressure Testing Requirements . . . 95
J.4 Documentation Requirements . . . 96
K.1 Isolation Valve Types . . . 99
O.1 Valve Datasheet . . . 106

Provided by IHS
No reproduction or networking permitted without license from IHS
Licensee=ISATIS Group http://st2014.ir
Not for Resale, 10/27/2014 05:55:32 MDT

Introduction

This specification is the result of updating the requirements of API Specification 6D, 23rd Edition including Addendum 1, Addendum 2, and Addendum 3.

The revision of API 6D is developed based on input from API 6D Task Group technical experts. The technical revisions have been made in order to accommodate the needs of industry and to move this specification to a higher level of service to the petroleum and natural gas industry.

This specification is not intended to inhibit a manufacturer from offering, or the purchaser from accepting, alternative equipment or engineering solutions for the individual application. This may be particularly applicable where there is innovative or developing technology.

Provided by IHS
No reproduction or networking permitted without license from IHS
Licensee=ISATIS Group http://st2014.ir
Not for Resale, 10/27/2014 05:55:32 MDT

--`,`,```,`,,,,,``,,,`,`,`,`,`-`-`,,`,,`,`,,`---

Provided by IHS
No reproduction or networking permitted without license from IHS

Licensee=ISATIS Group http://st2014.ir
Not for Resale, 10/27/2014 05:55:32 MDT

Specification for Pipeline and Piping Valves

1 Scope

1.1 General

This specification defines the requirements for the design, manufacturing, assembly, testing, and documentation of ball, check, gate, and plug valves for application in pipeline and piping systems for the petroleum and natural gas industries.

This specification is not applicable to subsea pipeline valves, as they are covered by a separate specification, API 6DSS.

This specification is not applicable to valves for pressure ratings exceeding Class 2500.

If product is supplied bearing the API Monogram and manufactured at a facility licensed by API, the requirements of Annex A applies.

Annexes B, C, D, E, F, G, H, I, J, K, L, M, N, and O are annexes that are used in order listed.

1.2 Conformance

1.2.1 Units of Measurement

In this specification, data are expressed in both U.S. customary (USC) and metric (SI) units.

1.2.2 Rounding

Except as otherwise required by this specification, to determine conformance with the specified requirements, observed or calculated values shall be rounded to the nearest unit in the last right-hand place of figures used in expressing the limiting value, in accordance with the rounding method of ASTM E29 or ISO 80000-1, Annex B, Rule A.

1.3 Conformance with Specification

A quality management system shall be applied to assist conformance with the requirements of this specification. The manufacturer shall be responsible for conforming with all of the applicable requirements of this specification.

It shall be permissible for the purchaser to make any investigation necessary in order to be assured of conformance by the manufacturer and to reject any material that does not conform.

1.4 Processes Requiring Validation

The following operations performed during manufacturing shall be validated, by the manufacturer, in accordance with their quality system as applicable:

— nondestructive examination (NDE)—reference 8.1;

— welding—reference Section 7;

— heat treating—reference 6.1;

— external coating/component plating that may impact product performance, by agreement.

Provided by IHS
No reproduction or networking permitted without license from IHS
Licensee=ISATIS Group http://st2014.ir
Not for Resale, 10/27/2014 05:55:32 MDT

2 Normative References

The following referenced documents are indispensable for the application of this document. For dated references, only the edition cited applies. For undated references, the latest edition of the referenced document (including any amendments) applies.

API Standard 6DX, *Standard for Actuator Sizing and Mounting Kits for Pipeline Valves*

API Specification 6FA, *Specification for Fire Test for Valves*

API Specification 6FD, *Specification for Fire Test for Check Valves*

API Standard 607, *Fire Test for Quarter-turn Valves and Valves Equipped with Nonmetallic Seats*

ASME B1.20.1 [1], *Pipe Threads, General Purpose, Inch*

ASME B16.5, *Pipe Flanges and Flanged Fitting: NPS 1/2 through 24*

ASME B16.10, *Face-to-Face and End-to-End Dimensions of Valves*

ASME B16.25, *Buttwelding Ends*

ASME B16.34, *Valves, Flanged, Threaded, and Welding End*

ASME B16.47, *Large Diameter Steel Flanges: NPS 26 through NPS 60 Metric/Inch Standard*

ASME B31.3, *Process Piping*

ASME B31.4, *Pipeline Transportation Systems for Liquid Hydrocarbons and Other Liquids*, 2013

ASME B31.8, *Gas Transmission and Distribution Piping Systems*

ASME *Boiler and Pressure Vessel Code (BPVC)*, *Section II: Materials, Part D: Properties*, 2013

ASME *Boiler and Pressure Vessel Code (BPVC)*, *Section V: Nondestructive Examination*, 2013

ASME *Boiler and Pressure Vessel Code (BPVC)*, *Section VIII: Rules for Construction of Pressure Vessels; Division 1: Rules for Construction of Pressure Vessels*, 2013

ASME *Boiler and Pressure Vessel Code (BPVC)*, *Section VIII: Rules for Construction of Pressure Vessels; Division 2: Alternative Rules*, 2013

ASME *Boiler and Pressure Vessel Code (BPVC)*, *Section IX: Welding and Brazing Qualifications*, 2013

ASNT SNT-TC-1A [2], *Recommended Practice No. SNT-TC-1A—Personnel Qualification and Certification in Non-Destructive Testing*

ASTM A320 [3], *Standard Specification for Alloy-Steel and Stainless Steel Bolting Materials for Low-Temperature Service*

ASTM A370, *Standard Test Methods and Definitions for Mechanical Testing of Steel Products*

ASTM A578A/A578M, *Standard Specification for Straight-Beam Ultrasonic Examination of Rolled Steel Plates for Special Applications*

1 ASME International, 2 Park Avenue, New York, New York 10016-5990, www.asme.org.
2 American Society for Nondestructive Testing, 1711 Arlingate Lane, P.O. Box 28518, Columbus, Ohio 43228, www.asnt.org.
3 ASTM International, 100 Barr Harbor Drive, West Conshohocken, Pennsylvania 19428, www.astm.org.

--`,`,```,`,,,,,,``,,,`,``,`,`,`-`,,`,,`,`,,`---

Provided by IHS
No reproduction or networking permitted without license from IHS

Licensee=ISATIS Group http://st2014.ir
Not for Resale, 10/27/2014 05:55:32 MDT

ASTM A609/A609M, *Standard Practice for Castings, Carbon, Low-Alloy, and Martensitic Stainless Steel, Ultrasonic Examination Thereof*

AWS QC1 [4], *Standard for AWS Certification of Welding Inspectors*

EN 287-1 [5], *Qualification test of welders—Fusion welding—Part 1: Steels*

EN 10204, *Metallic products—Type of inspection documents*

ISO 148-1 [6], *Metallic materials—Charpy pendulum impact test—Part 1: Test method*

ISO 228-1, *Pipe threads where pressure-tight joints are not made on the threads—Part 1: Dimensions, tolerances and designation*

ISO 5208:2008, *Industrial valves—Pressure testing of valves*

ISO 6892-1, *Metallic materials—Tensile testing—Part 1: Method of test at room temperature*

ISO 9606-1, *Approval testing of welders—Fusion welding—Part 1: Steels*

ISO 9712, *Non-destructive testing—Qualification and certification of personnel*

ISO 10474, *Steel and steel products—Inspection documents*

ISO 10497, *Testing of valves—Fire type-testing requirements*

ISO 15156 (all parts), *Petroleum and natural gas industries—Materials for use in H_2S-containing environments in oil and gas production*

ISO 15607, *Specification and qualification of welding procedures for metallic materials—General rules*

ISO TR 15608:2013, *Welding—Guidelines for a Metallic Materials Grouping System*

ISO 15609 (all parts), *Specification and qualification of welding procedures for metallic materials—Welding procedure specification*

ISO 15614-1, *Specification and qualification of welding procedures for metallic materials—Welding procedure test—Part 1: Arc and gas welding of steels and arc welding of nickel and nickel alloys*

ISO 15614-7, *Specification and qualification of welding procedures for metallic materials—Welding procedure test—Part 7: Overlay welding*

ISO 80000-1:2009, *Quantities and units—General principles*

MSS SP-44 [7], *Steel Pipeline Flanges*

MSS SP-55, *Quality Standard for Steel Castings for Valves, Flanges and Fittings and Other Piping Components—Visual Method for Evaluation of Surface Irregularities*

NACE MR0103 [8], *Materials Resistant to Sulfide Stress Cracking in Corrosive Petroleum Refining Environments*

---

4 American Welding Society, 8669 NW 36 Street, #130, Miami, Florida 33166-6672, www.aws.org.
5 European Committee for Standardization, Avenue Marnix 17, B-1000 Brussels, Belgium, www.cen.eu.
6 International Organization for Standardization, 1, ch. de la Voie-Creuse, Case postale 56, CH-1211 Geneva 20, Switzerland, www.iso.org.
7 Manufacturers Standardization Society of the Valve and Fittings Industry, Inc., 127 Park Street, NE, Vienna, Virginia 22180-4602, www.mss-hq.com.

Provided by IHS
No reproduction or networking permitted without license from IHS
Licensee=ISATIS Group http://st2014.ir
Not for Resale, 10/27/2014 05:55:32 MDT

NACE MR0175 (all parts), *Petroleum and natural gas industries—Materials for use in H_2S-containing environments in oil and gas production*

3 Terms, Definitions, Acronyms, Abbreviations, Symbols, and Units

3.1 Terms and Definitions

For the purposes of this document, the following definitions apply.

3.1.1
assembler
An organization that assembles components into finished product through welding, bolting, joining, etc.

NOTE The terms assembler and manufacturer are used interchangeably throughout this document.

3.1.2
assembly
The association of multiple parts into a finished product.

3.1.3
bidirectional seat
Valve seat designed to seal against pressure source in either direction.

3.1.4
bidirectional valve
Valve designed for blocking the fluid in both downstream and upstream directions.

3.1.5
bleed
Drain or vent.

3.1.6
block valve
Gate, plug, or ball valve that blocks flow into the downstream conduit when in the closed position.

NOTE Valves are either single seated or double seated and either bidirectional or unidirectional.

3.1.7
block and bleed valve
BB
Single valve with at least one seating surface that, in the closed position, provides a seal against pressure from one end of the valve with the body vented.

3.1.8
breakaway thrust
breakaway torque
Maximum thrust or torque required to operate a valve at maximum pressure differential.

3.1.9
by agreement
Agreed between manufacturer and purchaser.

[8] NACE International (formerly the National Association of Corrosion Engineers), 1440 South Creek Drive, Houston, Texas 77084-4906, www.nace.org.

Provided by IHS
No reproduction or networking permitted without license from IHS
Licensee=ISATIS Group http://st2014.ir
Not for Resale, 10/27/2014 05:55:32 MDT

3.1.10
double block and bleed valve
DBB
Single valve with two seating surfaces that, in the closed position, provides a seal against pressure from both ends of the valve with a means of venting/bleeding the cavity between the seating surfaces.

NOTE This valve does not provide positive double isolation when only one side is under pressure. See **double isolation and bleed valve** (3.1.11).

3.1.11
double isolation and bleed valve
DIB
Single valve with two seating surfaces, each of which, in the closed position, provides a seal against pressure from a single source, with a means of venting/bleeding the cavity between the seating surfaces.

NOTE This feature can be provided in one direction or in both directions.

3.1.12
downstream
The side of the valve where there would be no pressure or a lower pressure.

NOTE 1 Where the valve is bidirectional, this reference may change sides.

NOTE 2 The term does not refer to flow direction.

3.1.13
drive train
All parts of a valve drive between the operator and the obturator, including the obturator but excluding the operator.

3.1.14
flow coefficient
K_V
Volumetric flow rate of water at a temperature between 5 °C (40 °F) and 40 °C (104 °F) passing through a valve and resulting in a pressure loss of 0.1 MPa (1 bar; 14.5 psi).

NOTE 1 K_V is expressed in SI units of cubic meters per hour.

NOTE 2 K_V is related to the flow coefficient C_V, expressed in USC units of U.S. gallons per minute at 15.6 °C (60 °F) resulting in a 1 psi pressure drop as given by Equation (1):

$$K_v = \frac{C_v}{1.156} \quad (1)$$

3.1.15
full-opening valve
Valve with an unobstructed opening, not smaller than the internal bore of the end connections.

3.1.16
handwheel
Wheel consisting of a rim connected to a hub, for example by spokes, and used to manually operate a valve requiring multiple turns.

3.1.17
locking device
Part or an arrangement of parts for securing a valve in the open and/or closed position.

Provided by IHS
No reproduction or networking permitted without license from IHS
Licensee=ISATIS Group http://st2014.ir
Not for Resale, 10/27/2014 05:55:32 MDT

3.1.18
maximum pressure differential
MPD
Maximum difference between the upstream and downstream pressure across the obturator at which the obturator may be operated.

3.1.19
nominal pipe size
NPS
Numerical designation of size in inches that is common to components in piping systems.

NOTE Nominal pipe size is designated by the abbreviation “NPS” followed by a number.

3.1.20
nominal size
DN
Numerical designation of size in millimeters that is common to components in piping systems.

NOTE Nominal size is designated by the abbreviation “DN” followed by a number.

3.1.21
obturator
closure member
Part of a valve, such as a ball, clapper, disc, gate, or plug, that is positioned in the flow stream to permit or prevent flow.

3.1.22
off-site
Activity performed by a related facility of the assembler’s/manufacturer’s facility under an API Q1 or ISO 9001 conforming QMS for the activities performed.

3.1.23
on-site
Activity performed at the assembler’s/manufacturer’s facility.

3.1.24
operator
actuator
A mechanical device (or assembly) for opening or closing a valve.

NOTE 1 Manual wrench (lever) or handwheel with or without a gearbox.

NOTE 2 This can be an electric, hydraulic, or pneumatic device bolted or otherwise attached to the valve for powered opening and closing of the valve.

3.1.25
outsource
outsourced activity
Function or process that is performed by an external supplier on behalf of the assembler/manufacturer.

3.1.26
packing gland
Components used to compress/retain the stem packing.

Provided by IHS
No reproduction or networking permitted without license from IHS
Licensee=ISATIS Group http://st2014.ir
Not for Resale, 10/27/2014 05:55:32 MDT

3.1.27
piggability
Capability of a valve to permit the unrestricted passage of a pig.

3.1.28
position indicator
Device to show the position of the valve obturator.

3.1.29
preparation for shipment
Preparation of the valve in accordance with this specification.

3.1.30
pressure class
Numerical pressure design class pressure–temperature (P-T) ratings are designated by class numbers defined in ASME B16.34 and used for reference purposes.

NOTE The ASME rating class is designated by the word “Class” followed by a number. Pressure rating designation is the word “Class,” followed by a dimensionless number, (the designation for pressure–temperature ratings) as follows: Class 150, Class 300, Class 400, Class 600, Class 900, Class 1500, or Class 2500.

3.1.31
pressure-containing parts
A part whose failure to function as intended results in a release of contained fluid into the environment and as a minimum includes bodies, end connections, bonnets/covers, and stems.

3.1.32
pressure-controlling parts
A part intended to prevent or permit the flow of fluids and as a minimum includes ball, disc, plug, gate, and seat.

3.1.33
process-wetted parts
Parts exposed directly to the pipeline or piping fluid.

3.1.34
receiving verification
Verify that the inwards goods are received at the assembler.

3.1.35
reduced-opening valve
Valve with the opening through the obturator smaller than at the end connection(s).

3.1.36
seating surfaces
Contact surfaces of the obturator and seat that ensure valve sealing.

3.1.37
self-relieving seat
Valve seat designed to relieve pressure in the valve cavity. Depending upon valve type, the pressure may be relieved to the pressure source or the low pressure side.

3.1.38
shaft
Part that supports the obturator on a check valve and may or may not pass through the pressure boundary.

Provided by IHS
No reproduction or networking permitted without license from IHS
Licensee=ISATIS Group http://st2014.ir
Not for Resale, 10/27/2014 05:55:32 MDT

3.1.39
shell test
Test of the assembled pressure-containing parts.

3.1.40
stem
Part that drives the obturator and passes through the pressure boundary.

3.1.41
stem extension assembly
Assembly consisting of the stem extension and the stem extension housing.

3.1.42
support ribs or legs
Metal structure that provides a stable footing when the valve is set on a fixed base.

3.1.43
through-conduit valve
Valve with an unobstructed and continuous cylindrical opening.

3.1.44
unidirectional seat
Valve seat designed to seal the pressure source in one direction only.

3.1.45
unidirectional valve
Valve designed for blocking the flow in one direction only.

3.1.46
unless otherwise agreed
Modification of the requirements of this specification unless the manufacturer and purchaser agree on a deviation.

3.1.47
upstream
The side of the valve where the pressure is retained.

NOTE 1 Where the valve is bidirectional, this reference may change sides.

NOTE 2 The term does not refer to flow direction.

3.1.48
Venturi plug valve
Valve with a substantially reduced opening through the plug and a smooth transition from each full-opening end to the reduced opening.

3.1.49
verification testing
Testing (FAT) required by this specification.

3.1.50
welding
Activities on parts or final assemblies.

Provided by IHS
No reproduction or networking permitted without license from IHS
Licensee=ISATIS Group http://st2014.ir
Not for Resale, 10/27/2014 05:55:32 MDT

3.2 Acronyms and Abbreviations

For the purposes of this document, the following acronyms and abbreviations apply.

BB	block and bleed
BM	base metal
CE	carbon equivalent
DBB	double block and bleed
DIB	double isolation and bleed
DN	nominal size
HAZ	heat-affected zone
HBW	Brinell hardness, tungsten ball indenter
HRC	Rockwell C hardness
MPD	maximum pressure differential
MT	magnetic-particle testing
NDE	nondestructive examination
NPS	nominal pipe size
PQR	(weld) procedure qualification record
PT	penetrant testing
PWHT	postweld heat treatment
QSL	quality specification level
RT	radiographic testing
SMYS	specified minimum yield strength
TC	test coupon
UT	ultrasonic testing
VT	visual testing
WM	weld metal
WPS	weld procedure specification
WPQ	welder performance qualification

3.3 Symbols and Units

For the purposes of this document, the following symbols and units apply.

C_v	flow coefficient in USC units
K_v	flow coefficient in metric units
S_m	design stress intensity value
t	thickness

Provided by IHS
No reproduction or networking permitted without license from IHS
Licensee=ISATIS Group http://st2014.ir
Not for Resale, 10/27/2014 05:55:32 MDT

4 Valve Types and Configurations

4.1 Valve Types

4.1.1 Gate Valves

Typical configurations for gate valves with flanged and welding ends are shown, for illustration purposes only, in Figure B.1 and Figure B.2.

Gate valves shall have an obturator that moves in a plane perpendicular to the direction of flow. The gate can be constructed of one piece for slab-gate valves or of two or more pieces for expanding-gate valves.

Gate valves shall be provided with a back seat or secondary stem sealing feature in addition to the primary stem seal.

4.1.2 Lubricated and Nonlubricated Plug Valves

Typical configurations for plug valves with flanged and welding ends are shown, for illustration purposes only, in Figure B.3.

Plug valves shall have a cylindrical or conical obturator that rotates about an axis perpendicular to the direction of flow.

4.1.3 Ball Valves

Typical configurations for ball valves with flanged or welding ends are shown, for illustration purposes only, in Figure B.4, Figure B.5, Figure B.6, and Figure B.14.

Ball valves shall have a spherical obturator that rotates on an axis perpendicular to the direction of flow.

4.1.4 Check Valves

Typical configurations for check valves are shown, for illustration purposes only, in Figure B.7 to Figure B.13. Check valves can also be of the wafer, axial flow, and lift type.

Check valves shall have an obturator that responds automatically to block fluid in one direction.

4.2 Valve Configurations

4.2.1 Full-opening Valves

Full-opening valves shall be unobstructed in the fully opened position and shall have an internal minimum cylindrical opening for categorizing bore size as specified in Table 1. When pipe is used in the construction of the valves, the pipe shall meet the tolerances of the applicable pipe specification. Obturator and seat dimensions shall meet Table 1.

NOTE There is no restriction on the upper limit of valve bore sizes.

When there is no minimum bore dimensions listed for a valve pressure class and size stated in Table 1, the size and bore shall be by agreement and the manufacture shall stamp the size and bore on the nameplate.

Welding-end valves can require a smaller bore at the welding end to mate with the pipe.

Valves with a noncircular opening through the obturator shall not be considered full opening.

Provided by IHS
No reproduction or networking permitted without license from IHS
Licensee=ISATIS Group http://st2014.ir
Not for Resale, 10/27/2014 05:55:32 MDT

Table 1—Minimum Bore for Full-opening Valves

NPS	DN	Minimum Bore by Class in. (mm)			
		Class 150 to 600	Class 900	Class 1500	Class 2500
1/2	15	0.50 (13)	0.50 (13)	0.50 (13)	0.50 (13)
3/4	20	0.75 (19)	0.75 (19)	0.75 (19)	0.75 (19)
1	25	1.00 (25)	1.00 (25)	1.00 (25)	1.00 (25)
1 1/4	32	1.25 (32)	1.25 (32)	1.25 (32)	1.25 (32)
1 1/2	40	1.50 (38)	1.50 (38)	1.50 (38)	1.50 (38)
2	50	1.94 (49)	1.94 (49)	1.94 (49)	1.69 (42)
2 1/2	65	2.44 (62)	2.44 (62)	2.44 (62)	2.06 (52)
3	80	2.94 (74)	2.94 (74)	2.94 (74)	2.44 (62)
4	100	3.94 (100)	3.94 (100)	3.94 (100)	3.44 (87)
6	150	5.94 (150)	5.94 (150)	5.69 (144)	5.19 (131)
8	200	7.94 (201)	7.94 (201)	7.56 (192)	7.06 (179)
10	250	9.94 (252)	9.94 (252)	9.44 (239)	8.81 (223)
12	300	11.94 (303)	11.94 (303)	11.31 (287)	10.44 (265)
14	350	13.19 (334)	12.69 (322)	12.44 (315)	11.50 (292)
16	400	15.19 (385)	14.69 (373)	14.19 (360)	13.13 (333)
18	450	17.19 (436)	16.69 (423)	16.00 (406)	14.75 (374)
20	500	19.19 (487)	18.56 (471)	17.88 (454)	16.50 (419)
22	550	21.19 (538)	20.56 (522)	19.69 (500)	—
24	600	23.19 (589)	22.44 (570)	21.50 (546)	—
26	650	24.94 (633)	24.31 (617)	23.38 (594)	—
28	700	26.94 (684)	26.19 (665)	25.25 (641)	—
30	750	28.94 (735)	28.06 (712)	27.00 (686)	—
32	800	30.69 (779)	29.94 (760)	28.75 (730)	—
34	850	32.69 (830)	31.81 (808)	30.50 (775)	—
36	900	34.44 (874)	33.69 (855)	32.25 (819)	—
38	950	36.44 (925)	35.63 (904)	—	—
40	1000	38.44 (976)	37.63 (956)	—	—
42	1050	40.19 (1020)	39.63 (1006)	—	—
48	1200	45.94 (1166)	45.25 (1149)	—	—
54	1350	51.69 (1312)	—	—	—
56	1400	53.56 (1360)	—	—	—
60	1500	57.44 (1458)	—	—	—

Provided by IHS
No reproduction or networking permitted without license from IHS
Licensee=ISATIS Group http://st2014.ir
Not for Resale, 10/27/2014 05:55:32 MDT

4.2.2 Reduced-opening Valves

Reduced-opening valves with a circular opening through the obturator shall be supplied with a minimum bore as follows, unless otherwise agreed:

— valves NPS 4 (DN 100) to NPS 12 (DN 300): one size below nominal size of valve with bore according to Table 1,

— valves NPS 14 (DN 350) to NPS 24 (DN 600): two sizes below nominal size of valve with bore according to Table 1.

EXAMPLE A NPS 16 (DN 400) Class 1500 reduced-opening ball valve has a minimum bore of 11.31 in. (287 mm).

Reduced-opening valves with a noncircular opening through the obturator shall be supplied with a minimum opening by agreement.

5 Design

5.1 Design Standards and Calculations

Pressure-containing parts, including bolting, shall be designed with materials specified in Section 6.

Design and calculations for pressure-containing elements shall be in accordance with an internationally recognized design code or standard with consideration for pipe loads, operating forces, etc.

NOTE Examples of internationally recognized design codes or standards are ASME *BPVC*, Section VIII, Division 1 or Division 2; ASME B16.34; EN 12516-1 or EN 12516-2; and EN 13445-3.

The allowable stress values shall be consistent with the selected design code or standard.

If the selected design code or standard specifies a test pressure less than 1.5 times the design pressure, then the design pressure for the body calculation shall be increased such that the hydrostatic test pressure in 9.3 can be applied.

5.2 Pressure and Temperature Rating

Valves covered by this specification shall be furnished in one of the following pressure classes:

— Class 150, Class 300, Class 400, Class 600, Class 900, Class 1500, or Class 2500.

Pressure–temperature ratings for class-rated valves shall be in accordance with the applicable rating table for the appropriate material group in ASME B16.34.

Pressure–temperature ratings for Class 400 valves shall be in accordance with the applicable rating table for the appropriate material group in ASME B16.5.

NOTE It is not required that identical material or material form be used for body and bonnet or cover parts.

The pressure–temperature rating applied shall be based on the material group of the valve end connection. Where the valve ends are made from material in two different groups, the material with the lower pressure–temperature rating shall govern.

All metallic pressure-containing and pressure-controlling parts shall be designed to meet the applicable valve pressure–temperature rating.

--`,`,`,,`,,,,,,`,,,`,,`,`,`,,-`-`,,`,,`,`,,`---

Provided by IHS
No reproduction or networking permitted without license from IHS

Licensee=ISATIS Group http://st2014.ir
Not for Resale, 10/27/2014 05:55:32 MDT

If intermediate design pressures and temperatures are specified by the purchaser, the pressure–temperature rating shall be determined by linear interpolation in accordance with ASME B16.34. Valves with flanged end(s) shall not be designed to an intermediate rating due to the risk of the valve being transferred to a different application, which may utilize the full flange rating.

Pressure–temperature ratings for valves made from materials not covered by ASME B16.34 shall be determined from the material properties in accordance with the applicable design standard.

Manufacturer shall advise any limits on the design pressures and the minimum and maximum design temperatures due to nonmetallic parts.

The maximum operating pressure at the minimum and maximum operating temperatures shall be marked on the nameplate.

5.3 Sizes

Valves constructed to this specification shall be furnished in nominal sizes as listed in Table 1.

NOTE In this specification, NPS sizes are stated first followed by the equivalent DN size between brackets.

Except for reduced-opening valves, valve sizes shall be specified by the nominal pipe size (NPS) or nominal diameter (DN).

Reduced-opening valves with a circular opening shall be specified by the nominal size of the end connections and the nominal size of the reduced opening in accordance with Table 1.

EXAMPLE 1 A NPS 16 (DN 400) Class 150 valve with a reduced 11.94 in. (303 mm) diameter circular opening shall be specified as NPS 16 (DN 400) × NPS 12 (DN 300).

Reduced-opening valves with a noncircular opening and reduced-opening check valves shall be designated as reduced-bore valves and specified by the nominal size corresponding to the end connections followed by the letter “R.”

EXAMPLE 2 Reduced-bore valve with NPS 16 (DN 400) end connections and a 15 × 12 (381 mm × 305 mm) rectangular opening shall be specified as 16R.

5.4 Face-to-face and End-to-end Dimensions

Unless otherwise agreed, face-to-face (A) and end-to-end (B and C) dimensions of valves shall be in accordance with Table C.1 to Table C.5; see Figure B.1 to Figure B.14 for diagrams of dimensions A, B, and C where shown.

Face-to-face and end-to-end dimensions for valve sizes not specified in Table C.1 to Table C.5 shall be in accordance with ASME B16.10. Face-to-face and end-to-end dimensions not shown in Table C.1 to Table C.5 or in ASME B16.10 shall be established by agreement.

The length of valves having one welding end and one flanged end shall be determined by adding half the length of a flanged-end valve to half the length of a welding-end valve.

Tolerances on the face-to-face and end-to-end dimensions shall be ±0.06 in. (±1.5 mm) for valve sizes NPS 10 (DN 250) and smaller, and ±0.12 (±3.0 mm) for valve sizes NPS 12 (DN 300) and larger.

The nominal size and face-to-face or end-to-end dimensions shall be stated on the nameplate if not specified in, or not in accordance with, Table C.1 to Table C.5.

In some cases the support legs on some valve designs may have to be extended beyond the end-to-end dimensions to assure that the valve can be safely supported. These extensions shall be able to be removed if required after installation.

--`,,`,,`-`-`,,`,,`,`,,`---

Provided by IHS
No reproduction or networking permitted without license from IHS

Licensee=ISATIS Group http://st2014.ir
Not for Resale, 10/27/2014 05:55:32 MDT

5.5 Valve Operation

The purchaser should specify the method of operation and the maximum pressure differential (MPD) at which the valve is required to be opened by the lever, gearbox, or actuator. If not specified, the pressure as determined in accordance with 5.2 for material at 100 °F (38 °C) shall be the MPD.

The manufacturer shall provide the following data to the purchaser, if requested:

— flow coefficient C_V or K_V;

— breakaway thrust or torque for new valve and the breakaway travel or angle;

— valve run thrust or torque;

— maximum allowable stem thrust or torque on the valve and, if applicable, the maximum allowable input torque to the gearbox;

— number of turns for manually operated valves.

5.6 Pigging

The purchaser shall specify the requirements for piggability of the valves.

NOTE Guidance can be found in O.4.

5.7 Valve Ends

5.7.1 Flanged Ends

5.7.1.1 General

Flanges shall be furnished with a raised face or ring joint face (raised face or full face). Specified dimensions, tolerances, and finishes, including drilling templates, flange facing, nut-bearing surfaces (i.e. spot facing and back facing), outside diameters, and thickness (see Figure 1) shall be in accordance with:

— ASME B16.5 for sizes up to and including NPS 24 (DN 600) except NPS 22 (DN 550);

— MSS SP-44 for NPS 22 (DN 550); and

— ASME B16.47, Series A for NPS 26 (DN 650) and larger sizes.

If none of the above standards applies, the selection of another design code or standard shall be made by agreement.

For valves with heavy wall sections, flanges with nut stops in accordance with Mandatory Appendix 2, Figure 2-4 (Sketch 12 or 12a) of ASME *BPVC*, Section VIII, Division 1 may be required. The manufacturing method shall ensure flange alignment in accordance with 5.7.1.2, 5.7.1.3, and 5.7.1.4.

5.7.1.2 Offset of Aligned Flange Centerlines—Lateral Alignment

For valves up to and including NPS 4 (DN 100), the maximum flange misalignment shall be 0.079 in. (2 mm)

For valves larger than NPS 4 (DN 100), the maximum flange misalignment shall be 0.118 in. (3 mm).

Provided by IHS
No reproduction or networking permitted without license from IHS
Licensee=ISATIS Group http://st2014.ir
Not for Resale, 10/27/2014 05:55:32 MDT

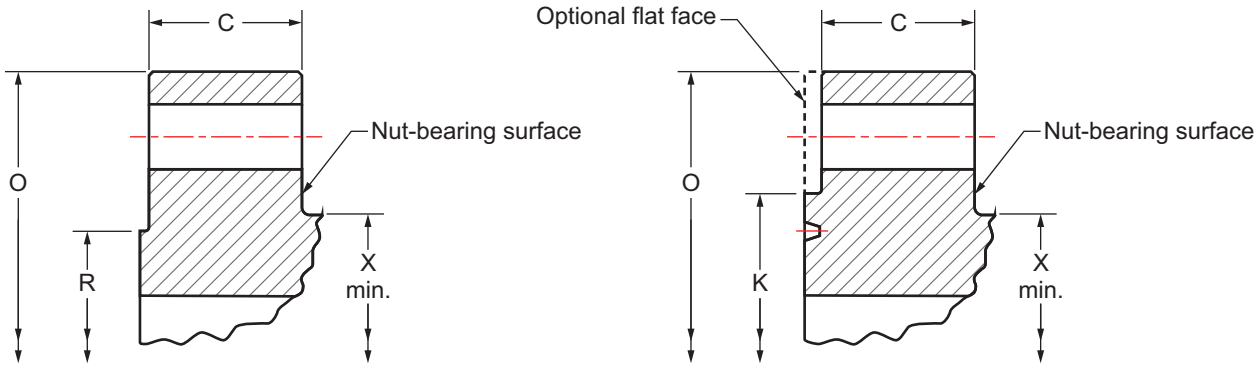

Key

C flange thickness
O outside diameter of flange
R raised-face diameter
K minimum diameter of raised portion of ring type joint flange
X_{min} hub diameter

Figure 1—Typical Flange Dimensions

5.7.1.3 Parallelism of Aligned Flange Faces—Angular Alignment

The maximum measured difference between flanges shall be 0.03 in./ft (2.5 mm/m).

5.7.1.4 Total Allowable Misalignment of Bolt Holes

For valves up to and including NPS 4 (DN 100), the maximum total allowable misalignment shall be no greater than 0.079 in. (2 mm) at the bolt holes (see Figure 2).

For valves larger than NPS 4 (DN 100), the maximum total allowable misalignment shall be equivalent to 0.118 in. (3 mm) at the bolt holes.

The surface of the nut bearing area at the back face of flanged valves shall be parallel to within 1° of the flange face.

5.7.2 Welding Ends

Welding ends shall conform to ASME B31.3, ASME B31.4, or ASME B31.8, unless otherwise agreed. In the case of a heavy-wall valve body, the outside profile may be tapered at 30° and then to 45° as illustrated in ASME B16.25.

The purchaser shall specify the outside diameter, wall thickness, material grade, specified minimum yield strength (SMYS) and any special chemistry of the mating pipe, and whether cladding has been applied.

5.7.3 Alternate Valve End Connections

Other end connections may be specified by the purchaser.

5.8 Valve Cavity Pressure Relief

The manufacturer shall determine whether fluid can become trapped in the body cavity in the open- and/or closed-valve position.

If fluid trapping is possible, the valve shall be provided with automatic cavity-pressure relief, unless otherwise agreed.

Provided by IHS
No reproduction or networking permitted without license from IHS
Licensee=ISATIS Group http://st2014.ir
Not for Resale, 10/27/2014 05:55:32 MDT

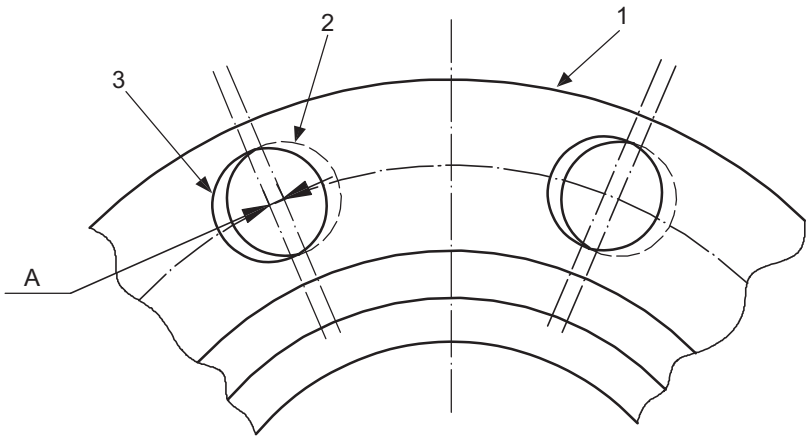

Key

1 flange
2 hole in first flange
3 hole in opposite flange for alignment
A bolt-hole misalignment (see 5.7.1.4)

Figure 2—Bolt-hole Misalignment

Valve cavity relief pressure when added to the valve pressure rating shall not exceed 133 % of the pressure rating of the valve at its maximum specified design temperature.

To achieve a higher cavity relief pressure, the valve shell shall be designed and tested to withstand a higher hydrostatic shell test pressure. The shell test shall be conducted in accordance with 9.3.

If a relief valve fitted to the cavity is required, purchaser may specify provisions to facilitate in service testing. External cavity relief valves shall be NPS $^{1}/_{2}$ (DN 15) or larger.

Cavity relief testing and functionality may be demonstrated by tests in H.8.2 for trunnion mounted ball valves and gate valves. Floating ball valve functionality may be demonstrated by agreement.

5.9 Drains

Drain connections shall be drilled and threaded. The purchaser may specify other types of connections, such as welded or flanged and/or other sizes.

Caution—Threaded connections can be susceptible to crevice corrosion.

Tapered threads shall be capable of providing a seal and comply with ASME B1.20.1.

If parallel threads are used, the connection shall have a head section for trapping and retaining a sealing member suitable for the specified valve service. Parallel threads shall comply with ASME B1.20.1 or ISO 228-1.

Sizes shall be in accordance with Table 2. Purchaser may specify other thread/pipe sizes.

5.10 Injection Points

Injection points for sealant, lubrication, or flushing may be provided for seats and/or stem. When provided, the injection points shall incorporate a check valve and a secondary means of isolation for each injection point. Sealant fittings shall have a design pressure not less than the greater of the pipeline or piping valve rated pressure and the injection pressure.

NOTE An example is a button head fitting with integral check valve and sealing cap.

Provided by IHS
No reproduction or networking permitted without license from IHS
Licensee=ISATIS Group http://st2014.ir
Not for Resale, 10/27/2014 05:55:32 MDT

Table 2—Thread/Pipe Sizes for Drains

Nominal Size of Valve		Thread/Pipe Size in. (mm)
NPS	DN	
1/2 to 1 1/2	15 to 40	1/4 (8)
2 to 4	50 to 100	1/2 (15)
6 to 8	150 to 200	3/4 (20)
>8	>200	1 (25)

5.11 Drain, Vent, and Sealant Lines

Drain, vent, and sealant lines may be provided. When drain, vent, and sealant lines are provided, the lines shall be composed of rigid pipework. The lines shall be fastened to the valve and/ or extensions and terminate close to the stem extension top works.

When provided, drain and vent lines shall

— have a design pressure not less than the rated pressure of the valve on which they are installed;

— be capable of withstanding the hydrostatic shell test pressure of the valve;

— be designed in accordance with a recognized design code;

— be suitable for blow-down operation, where applicable.

When provided, sealant lines shall be rated to the same criteria as sealant fittings in 5.10.

The manufacturer shall advise the maximum injection pressure for the system. The size of the sealant lines shall be by agreement. Prior to assembly, the internal bores of sealant lines shall be clean and free from rust and any foreign particles.

5.12 Drain, Vent, and Sealant Valves

Drain and vent block valves may be provided. When provided, the drain and block valves shall have a rated pressure not less than the valve on which they are installed and be suitable for blow-down operation. Block and check valves fitted to sealant injection lines shall be rated for the greater of the piping valve rated pressure and the injection pressure defined in 5.10.

5.13 Handwheels and Wrenches—Levers

Wrenches for valves shall either be of an integral design or consist of a head that fits on the stem and is designed to take an extended handle. The head design shall allow permanent attachment of the extended section if specified by the purchaser.

The maximum force required at the handwheel or wrench to apply the breakaway torque or thrust shall not exceed 80 lbf (360 N).

Wrenches that are of integral design (not loose) shall not be longer than twice the face-to-face or end-to-end dimension.

--`,,`,,`-`-`,,`,,`,`,,`---

Provided by IHS
No reproduction or networking permitted without license from IHS

Licensee=ISATIS Group http://st2014.ir
Not for Resale, 10/27/2014 05:55:32 MDT

Handwheel diameter(s) shall not exceed the 40 in. (1065 mm). Spokes shall not extend beyond the perimeter of the handwheel.

Direction of closing shall be clockwise.

5.14 Locking Provision

Valves may be supplied with a provision for locking.

When specified, the locking feature for check valves shall be designed to lock the valve in the open position only.

Locking feature for other types of valves shall be designed to lock the valve in the open and/or closed position.

5.15 Position of the Obturator

Except for check valves, the position of the obturator shall not be altered by dynamic forces of the passing flow or in the case of screw operated gate valves by forces generated from internal pressure.

5.16 Position Indicators

Valves fitted with manual or powered actuators shall be furnished with a visible indicator to show the open and the closed position of the obturator.

For plug and ball valves, the wrench and/or the position indicator shall be in line with the pipe when the valve is open and transverse when the valve is closed. The design shall be such that the component(s) of the indicator and/or wrench cannot be assembled to falsely indicate the valve position.

Valves without position stops shall have provision for the verification of open and closed alignment with the operator/actuator removed.

5.17 Travel Stops

Valves that do not require mechanical force to affect a seal shall be provided with travel stops on the valve and/or operator and they shall locate the position of the obturator in the open and closed position. The travel stops shall not affect the sealing capability of the valve. See Annex D for guidance for travel stops by valve type.

5.18 Actuator, Operators, and Stem Extensions

5.18.1 General

The output of an actuator shall not exceed the stress limits of the valve drive train permitted by 5.20.2.

Actuator sizing and mounting kits shall be in accordance with API 6DX.

5.18.2 Misalignment

Misalignment or improper assembly of components shall be prevented by suitable means, such as a dowel pin or fitting bolt, which ensures the correct location of manual or powered operators and stem extension assemblies.

5.18.3 Sealing

Operators, stem extensions, and their interfaces shall be sealed to prevent ingress of external contaminants and moisture.

Provided by IHS
No reproduction or networking permitted without license from IHS
Licensee=ISATIS Group http://st2014.ir
Not for Resale, 10/27/2014 05:55:32 MDT

5.18.4 Overpressure Protection

Operators and stem extension assemblies shall be provided with a means of preventing pressure buildup in the mechanism resulting from stem or bonnet seal leakage.

5.18.5 Protection of Extended Stems and Shafts in Belowground Service

Extended stems and shafts in belowground service shall be protected by an extension casing (housing).

5.19 Lifting

The manufacturer shall determine the need for and verify suitability of lifting points of the valve. The purchaser shall specify when lifting points on the valve are not required.

If the valve manufacturer is responsible for the supply of the valve and operator assembly, the valve manufacturer shall verify the suitability of the lifting points for the complete valve and operator assembly.

NOTE Regulatory requirements can specify special design, manufacturing, and certification of lifting points.

5.20 Drive Trains

5.20.1 Design Thrust or Torque

The design thrust or torque for all drive train calculations shall be at least two times the breakaway thrust or torque.

5.20.2 Allowable Stresses

Design stresses for tensile stress, shear stress (including torsional shear stress) and bearing stress shall comply with ASME *BPVC*, Section VIII except that the design stress intensity value, S_m, shall be taken as 67 % of SMYS.

In addition the average primary shear stress across a section loaded under design conditions in pure shear, e.g. keys, shear rings, screw threads, etc., shall be limited to 0.6 S_m.

The maximum primary shear under design conditions, exclusive of stress concentration at the periphery of a solid circular section in torsion, shall be limited to 0.8 S_m.

NOTE Allowable values of bearing stress can be found in the general notes section of ASME *BPVC*, Section II, Part D.

These stress limits do not apply to the components of rolling-element or other proprietary bearings or high bearing strength capable materials that are included in the drive train where manufacturer's recommendations or limits derived from tests and service experience apply. These limits shall be justified in design documents.

The drive train shall be designed such that the weakest component is outside the pressure boundary.

A strength efficiency factor of 0.75 shall be used for fillet welds.

5.20.3 Allowable Deflections

Deflections of the extended drive train shall not prevent the obturator from reaching the fully closed or fully open position.

For all valves, attention shall be paid to deflection and strain. Adherence to the allowable stress limits of design codes alone might not result in a functionally acceptable design. The manufacturer shall demonstrate, by calculation or test, that under loads resulting from design pressure and any defined pipe or external loads, distortion of the obturator or seat does not impair functionality or sealing.

--`,,`,,`-`-`,,`,,`,`,,`---

Provided by IHS
No reproduction or networking permitted without license from IHS

Licensee=ISATIS Group http://st2014.ir
Not for Resale, 10/27/2014 05:55:32 MDT

5.21 Stem Retention

Valves shall be designed to ensure that the stem does not eject under any internal pressure condition or if the packing gland components and/or valve operator mounting components are removed.

5.22 Fire Type-testing

Fire type-testing certification of the design may be provided. When required, the fire type-testing shall be performed in accordance with O.5.

5.23 Antistatic Device

Soft-seated ball, plug, and gate valves shall have an antistatic device. Testing of this device shall be in accordance with H.5 if specified by the purchaser.

6 Materials

6.1 Material Specification

Specifications for metallic pressure-containing and pressure-controlling parts shall be issued by the manufacturer and shall address the following:

— material grade;

— chemical analysis;

— heat treatment;

— mechanical properties (tensile);

— certification to report all items listed in 6.1.

Other requirements of the material specifications shall be as follows, if applicable:

— carbon equivalent (CE);

— Charpy impacts;

— hardness;

— testing.

Metallic pressure-containing parts shall be made of materials consistent with the pressure–temperature rating as determined in accordance with 5.2. Use of other materials shall be by agreement.

See informative Annex E for guidance on selection of material suppliers.

6.2 Tensile Test Requirements

Tensile test specimens shall be removed from a test coupon (TC) after the final heat-treatment cycle.

Perform tensile tests at room temperature in accordance with the procedures specified in ASTM A370 or ISO 6892-1.

Provided by IHS
No reproduction or networking permitted without license from IHS
Licensee=ISATIS Group http://st2014.ir
Not for Resale, 10/27/2014 05:55:32 MDT

Perform a minimum of one tensile test. All yield strengths shall be determined using 0.2 % offset method. The results of the tensile test(s) shall satisfy the applicable material specification requirements.

If the results of the tensile test(s) do not satisfy the applicable requirements, two additional tests on two additional test specimens (removed from the same TC with no additional heat treatment) may be performed in an effort to qualify the material. The results of each of these tests shall satisfy the applicable requirements.

6.3 Service Compatibility

All process-wetted parts, metallic and nonmetallic, and lubricants shall be suitable for the commissioning fluids and service when specified by the purchaser. Metallic materials shall be selected so as to avoid corrosion and galling, which would impair function and/or pressure containing capability.

Selection of elastomeric materials for valves intended for rapid gas decompression service at pressures of Class 600 and above shall address the effect of explosive decompression.

6.4 Forged Parts

All forged material(s) shall be formed using a hot-working practice and heat treatment that produces a forged structure throughout the material.

6.5 Composition Limits

The chemical composition of carbon steel pressure-containing and pressure-controlling parts shall be in accordance with the applicable material standards.

The chemical composition of carbon steel welding ends shall meet the following requirements.

— The carbon content shall not exceed 0.23 % by mass.

— The sulfur content shall not exceed 0.020 % by mass.

— The phosphorus content shall not exceed 0.025 % by mass.

— The carbon equivalent (CE) shall not exceed 0.43 %.

The CE shall be calculated in accordance with the equation below:

$$CE = \%\ C + \%\ Mn/6 + (\%\ Cr + \%\ Mo + \%\ V)/5 + (\%\ Ni + \%\ Cu)/15$$

The chemical composition of other carbon steel parts shall be in accordance with the applicable material standards.

The carbon content of austenitic stainless steel welding ends shall not exceed 0.03 % by mass, except for stabilized material in which case a carbon content of up to 0.08 % by mass is permissible.

The chemical composition of other materials shall be established by agreement.

6.6 Toughness Test Requirements

Carbon, alloy and stainless steel (except austenitic grades) for pressure-containing parts in valves with a specified design temperature below –20 °F (–29 °C) shall be impact-tested. The test method shall be the V-notch technique in accordance with ASTM A370 or ISO 148-1. When using ISO 148-1, a striker with a radius of 8 mm shall be used. Refer to ISO 148-1 for further details.

NOTE Design standards or local requirements can require impact testing for minimum design temperatures higher than –20 °F (–29 °C).

Provided by IHS
No reproduction or networking permitted without license from IHS
Licensee=ISATIS Group http://st2014.ir
Not for Resale, 10/27/2014 05:55:32 MDT

A minimum of one impact test, comprised of a set of three specimens, shall be performed on a representative test bar of each heat of the material in the final heat-treated condition.

Test specimens shall be cut from a separate or attached block taken from the same heat, reduced by forging where applicable, and heat treated to the same heat treatment, including stress relieving, as the product materials, except that it is not necessary to retest pressure-containing parts stress relieved at or below a previous stress-relieving or tempering temperature. The impact test shall be performed at the lowest temperature as defined in the applicable material specifications.

Except for material for bolting, impact test results for full-size specimens shall meet the requirements of Table 3.

Where the material specification for the pipeline and/or piping design standard requires impact values to be higher than those shown in Table 3, the higher values shall apply.

Impact test results for bolting material shall meet the requirements of ASTM A320.

Impact values for full-size specimens of duplex or super duplex stainless steels shall be as follows:

a) average of three specimens: 33 ft lb (45 J) minimum;

b) no single specimen less than 26 ft lb (35 J);

c) Impact test temperature shall be –50 °F (–46 °C).

If a test fails, then a retest of three additional specimens removed from the same TC, with no additional heat treatment, may be made, each of which shall exhibit an impact value equal to or exceeding the required average value.

Table 3—Minimum V-notch Impact Requirements (Full-size Specimen)

Specified Minimum Tensile Strength		Average of Three Specimens		Single Specimen	
KSI	MPa	ft lb	Joules	ft lb	Joules
≤85	≤586	15	20	12	16
>85 to 100	>586 to 689	20	27	16	21
>100	>689	25	34	19	26

6.7 Bolting

Bolting material shall be suitable for the specified valve service and pressure rating.

Carbon and low-alloy steel bolting material with a hardness exceeding HRC 35 (HBW 321) shall not be used for valve applications where hydrogen embrittlement can occur.

Hardness limits for other bolting materials shall be by agreement.

6.8 Sour Service

Materials for pressure-containing and pressure-controlling parts and bolting for sour service shall meet the requirements of NACE MR0175 or ISO 15156 (all parts) or NACE MR0103. Purchaser shall specify which standard is to be used.

Provided by IHS
No reproduction or networking permitted without license from IHS
Licensee=ISATIS Group http://st2014.ir
Not for Resale, 10/27/2014 05:55:32 MDT

6.9 Drain Connections

Threaded plugs shall be compatible with the valve body material or made from a corrosion-resistant material.

6.10 Heat-treating Equipment Qualification

All heat treating of parts and TCs shall be performed with “production-type” equipment meeting the requirements specified by the manufacturer. “Production-type” heat-treating equipment shall be considered equipment that is routinely used to process production parts.

All heat treatment for mechanical properties shall be performed using furnaces calibrated in accordance with Annex F of this specification. Postweld heat treatment (PWHT) shall be performed with heat-treat equipment meeting the requirements specified by the manufacturer.

Furnaces shall be calibrated and surveyed at least annually.

Records of furnace calibration and surveys shall be maintained for a period not less than five years.

7 Welding

7.1 Welding Consumables

Welding consumables shall conform to the American Welding Society's or manufacturer's specifications. The manufacturer shall have a written procedure for storage and control of welding consumables. Materials of low-hydrogen type (including electrodes, wires, and fluxes) shall be stored and used as recommended by the manufacturer of the welding consumable to retain their original low-hydrogen properties.

7.2 Welding Procedure and Welder/Welding Operator Qualifications

Welding, including repair welding, of pressure-containing and pressure-controlling parts shall be performed in accordance with procedures qualified to ASME *BPVC*, Section IX and 7.2 and 7.3 of this specification, or ISO 15607, ISO 15609, and ISO 15614-1.

Welders and welding operators shall be qualified in accordance with ASME *BPVC*, Section IX or ISO 9606-1, or EN 287-1.

NOTE The purchaser, pipeline or piping design standards, material specifications, and/or local requirements may specify additional requirements.

The results of all qualification tests shall be documented in a PQR.

PWHT shall be performed in accordance with the applicable material specification or design code.

For weld overlay, qualification shall be in accordance with ASME *BPVC*, Section IX, Articles II and III or ISO 15614-7.

Chemical analysis of the weld metal shall be performed in accordance with the requirements of ASME *BPVC*, Section IX at the minimum overlay thickness as specified by the manufacturer for the finished component.

NOTE To assure minimum thickness of 0.12 in. (3.0 mm), the weld overlay typically requires two passes to achieve the required dilution.

Provided by IHS
No reproduction or networking permitted without license from IHS
Licensee=ISATIS Group http://st2014.ir
Not for Resale, 10/27/2014 05:55:32 MDT

For weld overlay or clad welding with nickel-based alloy UNS N06625, the weld overlay or clad thickness chemical composition shall meet one of the classes listed below:

— Class Fe 10: iron mass fraction 10.0 % maximum; or

— Class Fe 5: iron mass fraction 5.0 % maximum, when specified by the purchaser.

For all other composition, the chemical analysis of the weld overlay or clad welding shall conform to the manufacturer's written specification.

NOTE Some pipeline welding standards have more stringent requirements for the essential variables of welding. It may be necessary to provide full weld test rings, in the same heat-treatment condition as the finished valve, for weld procedure qualification.

7.3 Impact Testing

Qualifications of procedures for welding, including repair welding, of, pressure-containing and pressure-controlling parts shall meet the following toughness test requirements.

Impact testing shall be carried out for the qualification of procedures for welding on valves with a design temperature below –20 °F (–29 °C).

NOTE Design standards and/or local requirements might require impact testing at minimum design temperatures above –20 °F (–29 °C).

As a minimum, one set of three weld metal (WM) impact specimens shall be taken from the WM at the location shown in Figure 3. The specimens shall be oriented with the notch perpendicular to the surface of the material. Multiple sets of weld metal impact specimens shall be required when more than one welding process is used. Weld metal impact testing must be performed to represent each welding process being qualified.

A set of three impact specimens shall be taken from the heat-affected zone (HAZ) at the location shown in Figure 4. The notch shall be placed perpendicularly to the material surface at a location resulting in a maximum amount of HAZ material located in the resulting fracture.

HAZ tests shall be conducted for each of the materials being joined when the base materials being joined are of a different P-number and/or group number in accordance with ASME *BPVC*, Section IX or ISO 9606-1, ISO 15607, ISO 15609, ISO 15614-1, and ISO 15608 or when one or both of the base materials being joined are not listed in the P-number and/or group number.

Impact testing shall be performed in accordance with ASTM A370 or ISO 148-1 using the Charpy V-notch technique. Specimens shall be etched to determine the location of the weld and HAZ.

The impact test temperature for welds and HAZs shall be at or below the minimum design temperature specified for the valve. Impact test results for full-size specimens shall meet the requirements of 6.6. If the material specification requires higher impact values than those shown in 6.6, the higher values shall apply.

7.4 Hardness Testing

Hardness testing shall be carried out as part of the welding procedure qualification on pressure-containing and pressure-controlling parts in valves required to meet NACE MR0175, ISO 15156 (all parts), or NACE MR0103, as applicable.

Hardness surveys shall be performed on base metal (BM), WM, and HAZ in accordance with the requirements of NACE MR0175, ISO 15156 (all parts), or NACE MR0103, as applicable.

--`,`,```,`,,,,,``,,,`,``,`,`,-`-`,,`,,`,`,,`---

Provided by IHS
No reproduction or networking permitted without license from IHS

Licensee=ISATIS Group http://st2014.ir
Not for Resale, 10/27/2014 05:55:32 MDT

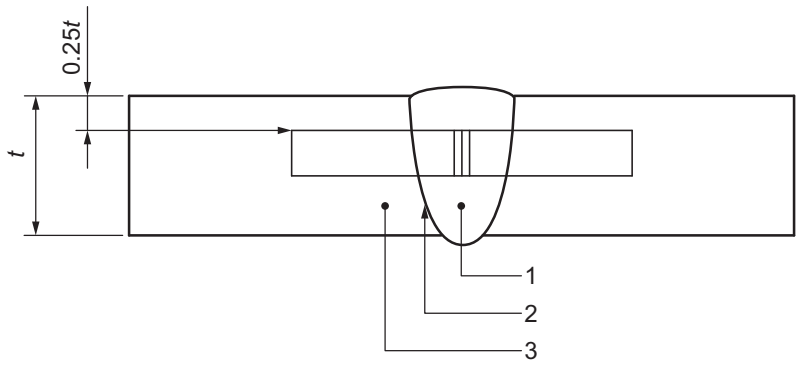

Key

1 weld metal (WM)
2 heat-affected zone (HAZ)
3 base metal (BM)

Figure 3—Charpy V-notch Weld Metal Specimen Location

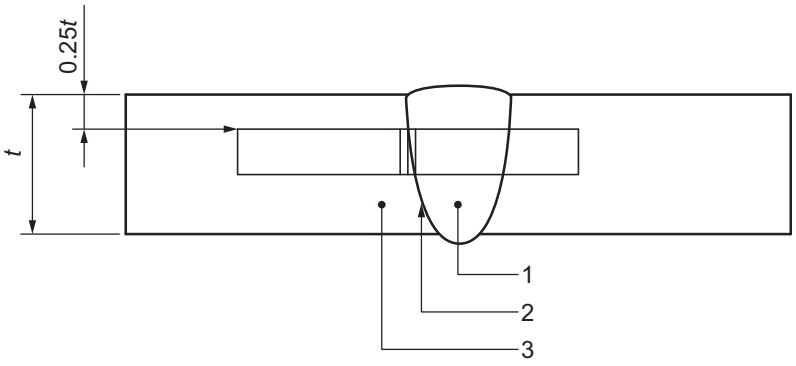

Key

1 weld metal (WM)
2 heat-affected zone (HAZ)
3 base metal (BM)

Figure 4—Charpy V-notch Heat-affected Zone Specimen Location

7.5 Repair

Minor defects may be removed by grinding provided there is a smooth transition between the ground area and the original contour and the minimum wall thickness requirements are not affected.

Repair of defects shall be performed in accordance with a documented procedure specifying requirements for defect removal, welding, heat treatment, NDE, and reporting as applicable.

Weld repair of forgings and plates shall not be performed to correct material defects, unless otherwise agreed. However, weld repair can be used to correct machining errors. The weld repair shall be in accordance with the applicable material standard, including any PWHT, if applicable.

Weld repair of castings shall be in accordance with the applicable material standard, including any PWHT, if applicable.

--`,`,```,`,,,,,,``,,,`,``,`,`,`,-`-`,,`,`,`,,`---

Provided by IHS
No reproduction or networking permitted without license from IHS

Licensee=ISATIS Group http://st2014.ir
Not for Resale, 10/27/2014 05:55:32 MDT

7.6 Repair of welds

Repair of welds shall be performed in accordance with the applicable design code or standard listed in 5.1, including any PWHT where applicable.

8 Quality Control

8.1 NDE Requirements

Final surface (MT and PT) and ultrasonic (UT) NDE activities shall be conducted after final heat treatment or postweld heat treatment. Final radiography (RT) NDE activities shall be conducted after final heat treatment, unless otherwise agreed.

NDE requirements shall be selected from the list in accordance with Annex G if specified by the purchaser.

8.2 Measuring and Test Equipment

8.2.1 General

Equipment used to inspect, test, or examine material or other equipment used for acceptance shall be identified, controlled, calibrated, and adjusted at specified intervals in accordance with documented manufacturer instructions, and consistent with nationally or internationally recognized standards specified by the manufacturer, to maintain the accuracy required by this specification.

8.2.2 Dimension-measuring Equipment

Dimension-measuring equipment shall be controlled and calibrated in accordance with methods specified in documented procedures.

8.2.3 Pressure-measuring Devices

8.2.3.1 Type and Accuracy

Test pressure-measuring devices shall be accurate to at least ± 2.0 % of full scale. If pressure gauges are used in lieu of pressure transducers, they shall be selected such that the test pressure is indicated within 20 % and 80 % of the full-scale value.

Pressure recording devices are outside the scope of 8.2.3.1.

8.2.3.2 Calibration Procedure

Pressure-measuring devices shall be calibrated with a master pressure-measuring device or deadweight tester to at least three equidistant points of full scale (excluding zero and full scale as required points of calibration).

8.2.3.3 Calibration Intervals

Calibration intervals shall be established for calibrations based on repeatability and degree of usage.

Calibration intervals shall be a maximum of three months until recorded calibration history can be established by the manufacturer.

Intervals shall be shortened and may be lengthened based on review of the calibration history and determination of interval adjustments as defined in the manufacturer's written procedure. Increments to establish longer intervals shall be limited to three months maximum.

Provided by IHS
No reproduction or networking permitted without license from IHS
Licensee=ISATIS Group http://st2014.ir
Not for Resale, 10/27/2014 05:55:32 MDT

The maximum calibration period shall not exceed one calendar year.

8.2.4 Temperature-measuring Devices

Temperature-measuring devices shall be capable of indicating and recording temperature fluctuations of 9 °F (5 °C).

8.2.5 Heat-treatment Equipment Calibration

Heat-treatment equipment calibration shall be performed prior to putting the equipment in service and shall be recalibrated at a frequency not longer than 12 months from the last calibration.

8.3 Qualification of Personnel

8.3.1 NDE Personnel

NDE personnel shall be qualified in accordance with the manufacturer's documented training program that is based on the requirements specified in ASNT SNT-TC-1A or ISO 9712.

NOTE Alternative standards are acceptable provided they meet the minimum requirements of ASNT SNT-TC-1A.

8.3.2 Visual Examination Personnel

Personnel performing visual inspection for acceptance shall take and pass an annual vision examination in accordance with the manufacturer's documented procedures that meet the applicable requirements of ASNT SNT-TC-1A or ISO 9712.

NOTE Alternative standards are acceptable provided they meet the minimum requirements of ASNT SNT-TC-1A.

8.3.3 Other Personnel

All personnel performing other quality control activities directly affecting material and product quality shall be qualified in accordance with manufacturer's documented requirements.

8.3.4 Welding Inspectors

Personnel performing visual inspections of welding operations and completed welds shall be qualified and certified by one of the following:

— AWS QC1 or equivalent certified welding inspector, or

— AWS QC1 or equivalent senior certified welding inspector, or

— AWS QC1 or equivalent certified associated welding inspector, or

— welding inspector certified by the manufacturer's documented training program.

8.4 NDE of Repairs

After defect removal, the excavated area shall be examined by magnetic-particle (MT) or liquid-penetrant (PT) methods in accordance with Annex G.

Repair welds on pressure-containing parts shall be examined using the same NDE method that was used to identify the defect with a minimum of MT or PT.

Provided by IHS
No reproduction or networking permitted without license from IHS
Licensee=ISATIS Group http://st2014.ir
Not for Resale, 10/27/2014 05:55:32 MDT

Acceptance criteria shall be as specified in Annex G for the appropriate product form. The final NDE activities shall be conducted after postweld heat treatment, unless otherwise agreed.

The NDE requirements specified by the purchaser in 8.1 shall also apply to repair welding.

8.5 Weld End NDE

If the purchaser specifies that weld ends be subjected to volumetric and/or surface NDE, the examination and acceptance criteria shall be in accordance with G.24, G.26, or G.27, as specified.

8.6 Visual Inspection of Castings

All castings as a minimum shall be visually inspected in accordance with MSS SP-55 with the following acceptance criteria:

— Type 1: none acceptable;

— Type 2 to 12: A and B only.

8.7 Quality Specification Levels (QSLs)

Annex J describes the QSLs including specific requirements for NDE, pressure testing, and documentation of the manufacturing process if specified by the purchaser.

9 Pressure Testing

9.1 General

Each valve shall be tested in the final assembled condition prior to shipment.

Testing shall be performed in the sequence detailed in 9.3 to 9.4. Backseat test that is only applicable to valves per 9.2 shall be performed before or after the hydrostatic shell test in 9.3.

Pressure testing shall be carried out before external coating of the valve. If the valve(s) has been previously tested in accordance with this specification, subsequent repeat hydrostatic and pneumatic testing may be performed without removal of the valve external coating.

Test fluid shall be fresh water and shall contain a corrosion inhibitor. Based on the end location of the valve, the test fluid shall have, antifreeze (glycol) added unless otherwise agreed. The water temperature shall not be greater than 100 °F (38 °C) during the testing period.

By agreement, lightweight oil having a viscosity not exceeding that of water may be used as test fluid.

The chloride content of test water in contact with austenitic and duplex stainless steel wetted components of valves shall not exceed 30 µg/g (30 ppm by mass). The chloride content in the test water shall be tested at least annually.

Valves shall be tested with the seating and sealing surfaces free from sealant except where the sealant is the primary means of sealing. A secondary seat and/or stem packing sealant system, if provided, shall not be used before or during tests.

All hydrostatic and pneumatic shell tests specified shall be performed with the valve unseated and partially open and may also be performed with the valve fully open, provided the body cavity is simultaneously filled and pressurized through a cavity connection.

--`,,`,,`-`-`,,`,,`,`,,`---

Provided by IHS
No reproduction or networking permitted without license from IHS

Licensee=ISATIS Group http://st2014.ir
Not for Resale, 10/27/2014 05:55:32 MDT

If the valve-body connections are not available for direct monitoring, methods for monitoring pressures and/or leakage shall be determined by other methods.

Supply pressure shall be isolated from the valve being tested and shall be stabilized prior to the start of pressure testing duration. The pressure measuring device shall be installed in the test apparatus in such a manner that the device continuously monitors/records the test pressure of the valve assembly. The pressure tests shall be held for the minimum test durations listed in Table 4, Table 5, or Table 6 after stabilization as determined by the manufacturer.

All pressure testing shall be performed in accordance with manufacturer's documented procedures.

Supplementary pressure tests are found in Annex H, Annex I, or Annex J, as required, if specified by the purchaser at time of order placement.

9.2 Stem Backseat Test

Testing of the backseat on valves that have this feature shall commence with the packing gland loose unless a test port is provided. Self-energized packing or seals shall be removed unless a test port is provided for this test.

The valves shall be filled with the ends closed off and the obturator in the partially open position until leakage of the test fluid around the stem is observed. The backseat shall then be closed and a minimum pressure of 1.1 times the pressure rating determined in accordance with 5.2 for material at 100 °F (38 °C) applied for the duration specified in Table 4.

Monitoring for leakage shall be through a test access port or by monitoring leakage around the loosened packing.

No visually detectable leakage during the test duration at test pressure on any external surface of the shell is cause for rejection.

Warning—Appropriate safety precautions must be taken.

Table 4—Minimum Duration of Stem Backseat Tests

Valve Size		Test Duration min
NPS	DN	
≤4	≤100	2
≥6	≥150	5

9.3 Hydrostatic Shell Test

Valve ends shall be closed off and the obturator placed in the partially open position during the test. If specified by the purchaser, the method of closing the ends shall permit the transmission of the full-pressure force acting on the end blanks to the valve body. If present, external relief valves shall be removed and their connections plugged.

The test pressure shall be 1.5 or more times the pressure rating determined in accordance with 5.2 for material at 100 °F (38 °C) based on the valve end connection material. The duration shall not be less than that specified in Table 5.

When the valve has been designed to withstand a higher hydrostatic shell test pressure per 5.8, the shell test pressure shall be 1.5 or more times the higher design pressure at 100 °F (38 °C).

When performing a higher hydrostatic shell test and the valve is flanged, the hydrostatic shell test shall be performed with bore sealing plugs to ensure the flanges are not subjected to test pressures greater than 1.5 times the valve flange rating.

Provided by IHS
No reproduction or networking permitted without license from IHS
Licensee=ISATIS Group http://st2014.ir
Not for Resale, 10/27/2014 05:55:32 MDT

The duration shall not be less than that specified in Table 5.

NOTE For additional guidance on extended shell test, see Annex I.

Table 5—Minimum Duration of Hydrostatic Shell Tests

Valve Size		Test Duration min
NPS	DN	
≤4	≤100	2
6 to 10	150 to 250	5
12 to 18	300 to 450	15
20 and larger	500 and larger	30

No visible leakage is permitted during the hydrostatic shell test.

After hydrostatic shell testing, external relief valves shall be fitted to valves that have this feature. The connection to the valve body shall be tested at 95 % of the set pressure of the relief valve for 2 min for valve sizes up to and including NPS 4 (DN 100) and 5 min for valve sizes NPS 6 (DN 150) and larger. The relief-valve connection shall be free of visible leakage during this period.

The external relief valves shall be set to relieve at the specified pressure and tested in accordance with 9.4.4.4.

If pipe pups are to be welded to the valve as part of the final assembly, the pressure rating of the pipe pups may be insufficient for the hydrostatic-shell test pressure, then the pups shall be welded to the valve following the valve-shell test and the valve and pup(s) tested at a pressure lower than the hydrostatic shell test not to exceed the test pressure of the pipe pups.

9.4 Hydrostatic Seat Test

9.4.1 Preparation

Lubricants or sealants shall be removed from seats and obturator sealing surfaces except where the lubricant or sealant is the primary means of sealing. Assembly lubricants for metal-to-metal contact surfaces may be used by agreement.

9.4.2 Test Pressure and Duration

The test pressure for all seat tests shall not be less than 1.1 times the pressure rating determined in accordance with 5.2 for material at 100 °F (38 °C) based on the valve end connection material. The test duration shall be in accordance with Table 6.

Table 6—Minimum Duration of Seat Tests

Valve Size		Test Duration min
NPS	DN	
≤4	≤100	2
6–18	150–450	5
20 and larger	500 and larger	10

Provided by IHS
No reproduction or networking permitted without license from IHS
Licensee=ISATIS Group http://st2014.ir
Not for Resale, 10/27/2014 05:55:32 MDT

9.4.3 Acceptance Criteria

Leakage for soft-seated valves and lubricated plug valves shall not exceed ISO 5208, Rate A (no visible detectable leakage for the duration of the test at test pressure).

For metal-seated valves, other than check valves, the liquid leakage rate shall not exceed ISO 5208, Rate D. The test procedures for various types of block valve are given in 9.4.4.

For metal-seated check valves the liquid leakage rate shall not exceed ISO 5208, Rate G.

Seat leakage shall be monitored from each seat via the valve body cavity vent or drain connection. Leakage detected as originating from behind seat rings or around resilient closure materials shall be cause for rejection.

NOTE Special application may require that the leakage rate be less than ISO 5208, Rate D.

9.4.4 Seat Test Procedures for Block Valves

9.4.4.1 Unidirectional

With the valve half-open, the valve and its cavity shall be completely filled with test fluid. The valve shall then be closed and the test pressure applied to the appropriate end of the valve.

Leakage from the upstream seat shall be monitored via the valve body cavity vent or drain connection, where provided. For valves without body cavity or drain connection, or downstream seated valves, seat leakage shall be monitored at the respective downstream end of the valve (the valve end downstream of the pressurized test fluid).

9.4.4.2 Bidirectional

With the valve half-open, the valve and its cavity shall be completely filled with test fluid. The valve shall then be closed and the test pressure applied successively to both ends of the valve.

Seat leakage shall be monitored from each seat via the valve body cavity vent or drain connection, where provided. For valves without a body-cavity vent or drain connection, seat leakage shall be monitored from the respective downstream end of the valve.

9.4.4.3 Additional Seat Testing

If the purchaser specifies the functionality for the valve to be that of double block and bleed (DBB) valves, the test described in H.9 shall be performed.

If the purchaser specifies the functionality for the valve to be that of double isolation and bleed (DIB-1), both seats bidirectional, the test described in H.10 shall be performed.

If the purchaser specifies the functionality for the valve to be that of DIB-2, one seat unidirectional and one seat bidirectional, the test described in H.11 shall be performed.

See Annex K for additional information on isolation features.

9.4.4.4 Test of Cavity Relief Valve

If provided, the external relief valve shall be set and certified to relieve to atmospheric pressure at the specified pressure either by the relief-valve supplier or the valve manufacturer.

Provided by IHS
No reproduction or networking permitted without license from IHS
Licensee=ISATIS Group http://st2014.ir
Not for Resale, 10/27/2014 05:55:32 MDT

The set pressure of relief valves shall be between 1.1 and 1.33 times, and the reseat pressure shall not be less than 1.05 times the valve pressure rating determined in accordance with 5.2 for material at 100 °F (38 °C).

9.4.4.5 Installation of Body Connections After Testing

Parts, such as drain plug(s) and cavity-relief valves, shall be fitted, on completion of testing, in accordance with documented procedures.

9.4.4.6 Alternative Seat Test

High-pressure gas seat testing in accordance with H.4.3 may be performed in lieu of the hydrostatic seat test by agreement.

9.5 Check Valves

The seat test pressure for check valves shall be applied in the direction of the required flow blockage.

9.6 Testing of Drain, Vent, and Sealant Injection Lines

If provided as part of the final assembly, drain, vent, and sealant injection lines shall be subject to a hydrostatic test with the valve in accordance with 9.3.

If testing with the fully assembled valve is not practical, these lines shall be tested separately at the test pressure in 9.3. The final assembly connection is subjected to the hydrostatic test in 9.3 unless otherwise agreed.

The test pressure for sealant injection lines shall be by agreement.

9.7 Draining

Upon completion of tests, valves shall be drained of test fluids, dried, and where applicable, lubricated before shipment.

10 Coating/Painting

All non-corrosion-resistant valves shall be coated or painted externally in accordance with the manufacturer's standards, unless otherwise agreed. If external coating or painting operations are performed by the manufacturer or their coating or painting contractor, preventative measures shall be taken to assure that no foreign material enters the internal cavity of the valve that may impact the valve function.

Corrosion-resistant valves shall not be coated or painted, unless otherwise agreed.

Flange face and actuator mounting flange sealing surfaces, weld bevel ends, and exposed stems shall not be coated.

See Annex L for details on where coatings are not allowed.

Corrosion protection shall be provided using the manufacturer's documented requirements for flange faces, weld bevel ends, exposed stems, and internal surfaces of the valve.

11 Marking

Valves shall be marked in accordance with the requirements of Table 7 to be in compliance with this product specification.

Provided by IHS
No reproduction or networking permitted without license from IHS
Licensee=ISATIS Group http://st2014.ir
Not for Resale, 10/27/2014 05:55:32 MDT

Table 7—Valve Marking

No.	Marking	Location
1a	Manufacturer's name	On body and/or nameplate
1b	Trademark or mark (optional)	On body and/or nameplate
2	Pressure class	On both body and nameplate
3	Pressure–temperature rating: a) maximum operating pressure at maximum operating temperature and b) maximum operating pressure at minimum operating temperature	On nameplate
4	Face-to-face/end-to-end dimensions, if not shown in Table C.1 to Table C.5 (5.4)	On nameplate
5	Body/closure/end connection material designation [a] [c]: material grade	On both body/closure end connection and nameplate; melt identification (e.g. cast or heat number) on body/closure end connection only
6	Bonnet/cover material designation [c]: material grade	On bonnet/cover; melt identification (e.g. heat number) on bonnet/cover only
7	Trim identification [b]: material grade symbols indicating material of stem and sealing faces of closure members if different from that of body	On nameplate
8	Nominal valve size a) full-opening valves: nominal valve size b) reduced-opening valves: shall be marked as specified in 5.3	On both body and nameplate
9	Ring joint groove number	On valve flange OD
10	SMYS (units) of valve ends, where applicable	On body weld ends
11	Flow direction (for check valves only)	On body
12	Seat sealing direction (valves with preferred direction only)	On separate identification plate affixed to valve body
13	Seat test per H.9, H.10, or H.11 for DBB, DIB-1, or DIB-2, respectively (where applicable)	On nameplate
14	QSL level: QSL-1, QSL-2, QSL-3, or QSL-4 (where applicable)	On nameplate
15	Unique serial number	On both body and nameplate
16	Date of manufacture (month and year)	On nameplate
17	6D or API 6D (Product specification number)	On nameplate
18	Product specification license number (if applicable)	On nameplate

[a] When the body is manufactured from more than one type of material, both the body and end-connection material shall be identified.

[b] MSS SP-25 gives guidance on marking.

[c] Where the grade and class does not uniquely identify the material specification, the material specification, grade, and class shall be marked. Example: A516-70.

--`,`,```,`,,,,,,``,,,`,``,`,`,`,-`-`,,`,,`,`,,`---

Provided by IHS
No reproduction or networking permitted without license from IHS

Licensee=ISATIS Group http://st2014.ir
Not for Resale, 10/27/2014 05:55:32 MDT

Body, closure/end connector, and cover/bonnet marking shall be performed using a low-stress die-stamp (rounded “V” or dot face type) or cast.

Each valve shall be provided with an austenitic stainless steel nameplate securely affixed and so located that it is easily accessible. The nameplate shall be attached to the valve body; however, based on valve design the nameplate may be attached to the bonnet/cover or end connector at the option of the manufacturer. For valves smaller than NPS 2 (DN 50), the nameplate shall not be omitted, but may be attached to the valve with stainless steel wire.

The marking on the body, end connector, bonnet/cover and nameplate shall be visually legible. Marking on the body closure/end connector and bonnet/cover shall be not less than 0.25 in. (6 mm).

The nameplate minimum letter size shall be 0.125 in. (3 mm) on valves sizes NPS 2 (DN 50) and larger. For all valves NPS 1.5 in (DN 38) and smaller, the nameplate letter size shall be per the manufacturer's standard.

On valves whose size or shape limits the body markings, they may be omitted in the following order:

1) size,

2) rating,

3) material,

4) manufacturer name or trademark.

The nameplate and serial number may be omitted for valves smaller than DN 50 (NPS 2), only by agreement.

For valves with one unidirectional seat and one bidirectional seat, the directions of both seats shall be specified on a separate identification plate as illustrated in Figure 5. In Figure 5, one symbol indicates the bidirectional seat and the other symbol indicates the unidirectional seat.

An example of valve marking is given in Annex M.

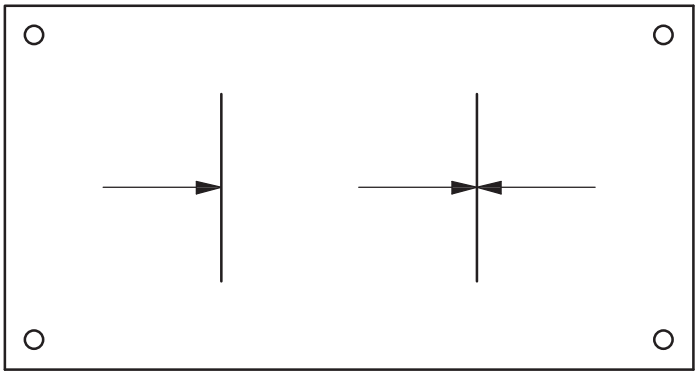

Figure 5—Typical Identification Plate for a Valve with One Seat Unidirectional and One Seat Bidirectional

12 Preparation for Shipment

Flanged and welding ends shall be blanked off to protect the gasket surfaces, welding ends, and valve internals during shipment.

Protective covers shall be made of wood, wood fiber, plastic, or metal and shall be securely attached to the valve ends by using bolting/nuts, plastic straps, steel clips, or friction-locking devices.

Provided by IHS
No reproduction or networking permitted without license from IHS
Licensee=ISATIS Group http://st2014.ir
Not for Resale, 10/27/2014 05:55:32 MDT

Protective covers made of wood or wood fiber shall be fitted with a nonporous moisture barrier between the cover and the metal flange or welding end. All flanged end and weld end protective covers installed on the valves shall be sealed using a rubberized waterproof tape.

The design of the covers shall prevent the valves from being installed unless the covers have been removed.

Plug, ball, and reverse-acting through-conduit gate valves shall be shipped in the fully open position, unless fitted with a fail-to-close actuator.

Other gate valve types shall be shipped with the gate in the fully closed position.

Check valves NPS 4 (DN 100) and larger shall be shipped with the disc secured or supported during transport. A warning label shall be attached to the protective cover with instructions to remove, prior to installation, material from inside the valve that secures or supports the disc.

Valves shipped with stem extensions and without an operating mechanism shall have the annular space closed and the stem extension secured to the outer housing.

13 Documentation

13.1 Minimum Documentation and Retention

The documentation listed below shall be retained by the manufacturer for a minimum of 10 years following the date of manufacture:

a) design documentation;

b) weld procedure specification (WPS);

c) weld procedure qualification record (PQR);

d) welder performance qualification (WPQ);

e) qualification records of NDE personnel;

f) records of test equipment calibration;

g) NDE records [for radiographic testing (RT), minimum NDE records are reader sheets and technique sheet];

h) for valves NPS 2 (DN 50) and larger:

   1) material test report for body, bonnet/cover(s), and end connector(s)/closure(s) traceable to the unique valve serial number;

   2) serial number;

   3) pressure test results (including hydrostatic and or pneumatic);

   4) for sour service valves, certificate of conformance to NACE MR0175, ISO 15156 (all parts), or NACE MR0103.

NOTE Purchaser or regulatory requirements can specify a longer record retention period.

The documentation shall be provided by the manufacturer in legible, retrievable, and reproducible form and free of damage.

Provided by IHS
No reproduction or networking permitted without license from IHS
Licensee=ISATIS Group http://st2014.ir
Not for Resale, 10/27/2014 05:55:32 MDT

The purchaser can specify supplementary documentation in accordance with Annex N.

13.2 Documentation Provided with the Valve(s)

As a minimum, a certificate of conformance to this specification shall be supplied by the manufacturer. The certificate(s) shall identify the valve type, size, class, end connection, serial number(s), any additional requirement specified by the manufacturer or purchaser, and a statement that valve(s) is/are in full conformance with this product specification edition and all addenda.

14 Facility Requirements

14.1 Minimum Facility Requirements for the Assembler Category of Manufacturing

The assembler (see 3.1.1) shall have on-site equipment and personnel to perform the required processes needed to produce the products under the scope of this specification as identified in Table 8.

14.2 Activities Applicable to an Assembler Facility

The activities for an assembler are listed in Table 8 and shall be performed at the applicable facility.

Table 8—Minimum Facility Requirements

Item	Process Activity	Location
1	Product design	Performed on-site, off-site, and/or outsourced
1b	Product design validation	Performed on-site and/or off-site
2	Material procurement	Performed on-site, off-site, and/or outsourced
3	Receiving verification	Performed on-site
4	Machining	Performed on-site, off-site, and/or outsourced
5	In-process inspection	Performed on-site, off-site, and/or outsourced
6	Welding	Performed on-site, off-site, and/or outsourced
7	Assembly	Performed on-site
8	Verification testing (Section 9)	Performed on-site
9	Supplementary NDE and testing (Annexes G, H, I, and J)	Performed on-site, off-site, and/or outsourced
10	Marking/tagging/nameplate	Performed on-site
11	Painting/coating	Performed on-site, off-site, and/or outsourced
12	Preparation for shipment	Performed on-site
13	Final inspection	Performed on-site

--`,`,```,`,,,,,,``,,,`,``,`,`,`,-`-`,,`,`,`,`---

Provided by IHS
No reproduction or networking permitted without license from IHS

Licensee=ISATIS Group http://st2014.ir
Not for Resale, 10/27/2014 05:55:32 MDT

Annex A
(informative)

API Monogram Program
Use of the API Monogram by Licensees

A.1 Scope

A.1.1 Applicability

This annex is only normative for product supplied bearing the API Monogram and manufactured at a facility licensed by API; for all other instances it is not applicable.

A.1.2 General

The API Monogram® is a registered certification mark owned by the American Petroleum Institute (API) and authorized for licensing by the API Board of Directors. Through the API Monogram Program, API licenses product manufacturers to apply the API Monogram to products which comply with product specifications and have been manufactured under a quality management system that meets the requirements of API Q1. API maintains a complete, searchable list of all Monogram licensees on the API Composite List website (www.api.org/compositelist).

The application of the API Monogram and license number on products constitutes a representation and warranty by the licensee to API and to purchasers of the products that, as of the date indicated, the products were manufactured under a quality management system conforming to the requirements of API Q1 and that the product conforms in every detail with the applicable standard(s) or product specification(s). API Monogram program licenses are issued only after an on-site audit has verified that an organization has implemented and continually maintained a quality management system that meets the requirements of API Q1 and that the resulting products satisfy the requirements of the applicable API product specification(s) and/or standard(s). Although any manufacturer may claim that its products meet API product requirements without monogramming them, only manufacturers with a license from API can apply the API Monogram to their products.

Together with the requirements of the API Monogram license agreement, this annex establishes the requirements for those organizations who wish to voluntarily obtain an API license to provide API monogrammed products that satisfy the requirements of the applicable API product specification(s) and/or standard(s) and API Monogram Program requirements.

For information on becoming an API Monogram Licensee, please contact API, Certification Programs, 1220 L Street, NW, Washington, DC 20005 or call 202-682-8145 or by email at certification@api.org.

A.2 Normative References

In addition to the referenced standards listed earlier in this document, this annex references the following standard:

API Specification Q1, S*pecification for Quality Management System Requirements for Manufacturing Organizations for the Petroleum and Natural Gas Industry*

For Licensees under the Monogram Program, the latest version of this document shall be used. The requirements identified therein are mandatory.

Provided by IHS
No reproduction or networking permitted without license from IHS
Licensee=ISATIS Group http://st2014.ir
Not for Resale, 10/27/2014 05:55:32 MDT

A.3 API Monogram Program: Licensee Responsibilities

A.3.1 Monogram Program Requirements

For all organizations desiring to acquire and maintain a license to use the API Monogram, conformance with the following shall be required at all times:

a) the quality management system requirements of API Q1;

b) the API Monogram Program requirements of API Q1, Annex A;

c) the requirements contained in the API product specification(s) to which the organization is licensed;

d) the requirements contained in the API Monogram Program License Agreement.

A.3.2 Control of the Application and Removal of the API Monogram

Each licensee shall control the application and removal of the API Monogram in accordance with the following.

a) Products that do not conform to API specified requirements shall not bear the API Monogram.

b) Each licensee shall develop and maintain an API Monogram marking procedure that documents the marking/ monogramming requirements specified by this annex and any applicable API product specification(s) and/or standard(s). The marking procedure shall:

   1) define the authority responsible for application and removal of the API Monogram and license number;

   2) define the method(s) used to apply the Monogram and license number;

   3) identify the location on the product where the API Monogram and license number are to be applied;

   4) require the application of the date of manufacture of the product in conjunction with the use of the API Monogram and license number;

   5) require that the date of manufacture, at a minimum, be two digits representing the month and two digits representing the year (e.g. 05-12 for May 2012) unless otherwise stipulated in the applicable API product specification(s) or standard(s); and

   6) define the application of all other required API product specification(s) and/or standard(s) marking requirements.

c) Only an API licensee shall apply the API Monogram and its designated license number to API monogrammable products.

d) The API Monogram and license number, when issued, are site-specific and subsequently the API Monogram shall only be applied at that site specific licensed facility location.

e) The API Monogram may be applied at any time appropriate during the production process but shall be removed in accordance with the licensee's API Monogram marking procedure if the product is subsequently found to be out of conformance with any of the requirements of the applicable API product specification(s) and/or standard(s) and API Monogram Program.

For certain manufacturing processes or types of products, alternative API Monogram marking procedures may be acceptable. Requirements for alternative API Monogram marking are detailed in the, API Monogram Program

Provided by IHS
No reproduction or networking permitted without license from IHS
Licensee=ISATIS Group http://st2014.ir
Not for Resale, 10/27/2014 05:55:32 MDT

Alternative Marking of Products License Agreement, available on the API Monogram Program website at http://www.api.org/alternative-marking.

A.3.3 Design and Design Documentation

Each licensee and/or applicant for licensing shall maintain current design documentation as identified in API Q1 for all of the applicable products that fall under the scope of each Monogram license. The design document information shall provide objective evidence that the product design meets the requirements of the applicable and most current API product specification(s) and/or standard(s). The design documentation shall be made available during API audits of the facility.

In specific instances, the exclusion of design activities is allowed under the Monogram Program, as detailed in Advisory # 6, available on API Monogram Program website at http://www.api.org/advisories.

A.3.4 Manufacturing Capability

The API Monogram Program is designed to identify facilities that have demonstrated the ability to manufacture equipment that conforms to API specifications and/or standards. API may refuse initial licensing or suspend current licensing based on a facility's level of manufacturing capability. If API determines that an additional review is warranted, API may perform additional audits (at the organization's expense) of any subcontractors to ensure their conformance with the requirements of the applicable API product specification(s) and/or standard(s).

A.3.5 Use of the API Monogram in Advertising

An API Monogram licensee shall not use the API Monogram and/or license number on letterheads, buildings or other structures, websites or in any advertising without an express statement of fact describing the scope of Licensee's authorization (license number and product specification). The Licensee should contact API for guidance on the use of the API Monogram other than on products.

A.4 Product Marking Requirements

A.4.1 General

These marking requirements shall apply only to those API Licensees wishing to mark applicable products in conjunction with the requirements of the API Monogram Program.

A.4.2 Product Specification Identification

Manufacturers shall mark products as specified by the applicable API specifications or standards. Marking shall include reference to the applicable API specification and/or standard. Unless otherwise specified, reference to the API specifications and/or standards shall be, as a minimum, "API [Document Number]" (e.g. API 6A, or API 600). Unless otherwise specified, when space allows, the marking may include use of "Spec" or "Std," as applicable (e.g. API Spec 6A or API Std 600).

A.4.3 Units

Products shall be marked with units as specified in the API specification and/or standard. If not specified, equipment shall be marked with U.S. customary (USC) units. Use of dual units [USC units and metric (SI) units] may be acceptable, if such units are allowed by the applicable product specification and/or standard.

Provided by IHS
No reproduction or networking permitted without license from IHS
Licensee=ISATIS Group http://st2014.ir
Not for Resale, 10/27/2014 05:55:32 MDT

A.4.4 Nameplates

Nameplates, when applicable, shall be made of a corrosion-resistant material unless otherwise specified by the API specification and/or standard. Nameplate shall be located as specified by the API specification and/or standard. If the location is not specified, then the licensee shall develop and maintain a procedure detailing the location to which the nameplate shall be applied. Nameplates may be attached at any time during the manufacturing process.

The API Monogram and license number shall be marked on the nameplate, in addition to the other product marking requirements specified by the applicable product specification and/or standard.

A.4.5 License Number

The API Monogram license number shall not be used unless it is marked in conjunction with the API Monogram. The license number shall be used in close proximity to the API Monogram.

A.5 API Monogram Program: Nonconformance Reporting

API solicits information on products that are found to be nonconforming with API specified requirements, as well as field failures (or malfunctions), which are judged to be caused by either specification and/or standard deficiencies or nonconformities against API specified requirements. Customers are requested to report to API all problems with API monogrammed products. A nonconformance may be reported using the API Nonconformance Reporting System available at http://compositelist.api.org/ncr.aspx.

Provided by IHS
No reproduction or networking permitted without license from IHS
Licensee=ISATIS Group http://st2014.ir
Not for Resale, 10/27/2014 05:55:32 MDT

Annex B
(informative)

Valve Configurations

This annex shows typical configurations for gate, plug, ball, and check valves with flanged and welding ends.

Figure B.1—Expanding-gate/Rising-stem Gate Valve

Figure B.2—Slab-gate/Through-conduit Rising-stem Gate Valve

Figure B.3—Plug Valve

Figure B.4—Top-entry Trunnion Mounted Ball Valve

Figure B.5—Three-piece Trunnion Mounted Ball Valve

Figure B.6—Welded-body Trunnion Mounted Ball Valve

Figure B.7—Reduced-opening Swing Check Valve

Figure B.8—Full-opening Swing Check Valve

Figure B.9—Single-plate Wafer-type Check Valve, Long Pattern

Figure B.10—Typical Dual-plate Wafer-type Check Valve, Long Pattern

Figure B.11—Single-plate Wafer-type Check Valve, Short Pattern

Figure B.12—Axial Flow Check Valve

Figure B.13—Piston Check Valve

Figure B.14—Floating Ball Valve

--`,`,`,````,`,,,,,``,,,`,``,`,`,`,-`-`,,`,,`,`,,`---

Provided by IHS
No reproduction or networking permitted without license from IHS

Licensee=ISATIS Group http://st2014.ir
Not for Resale, 10/27/2014 05:55:32 MDT

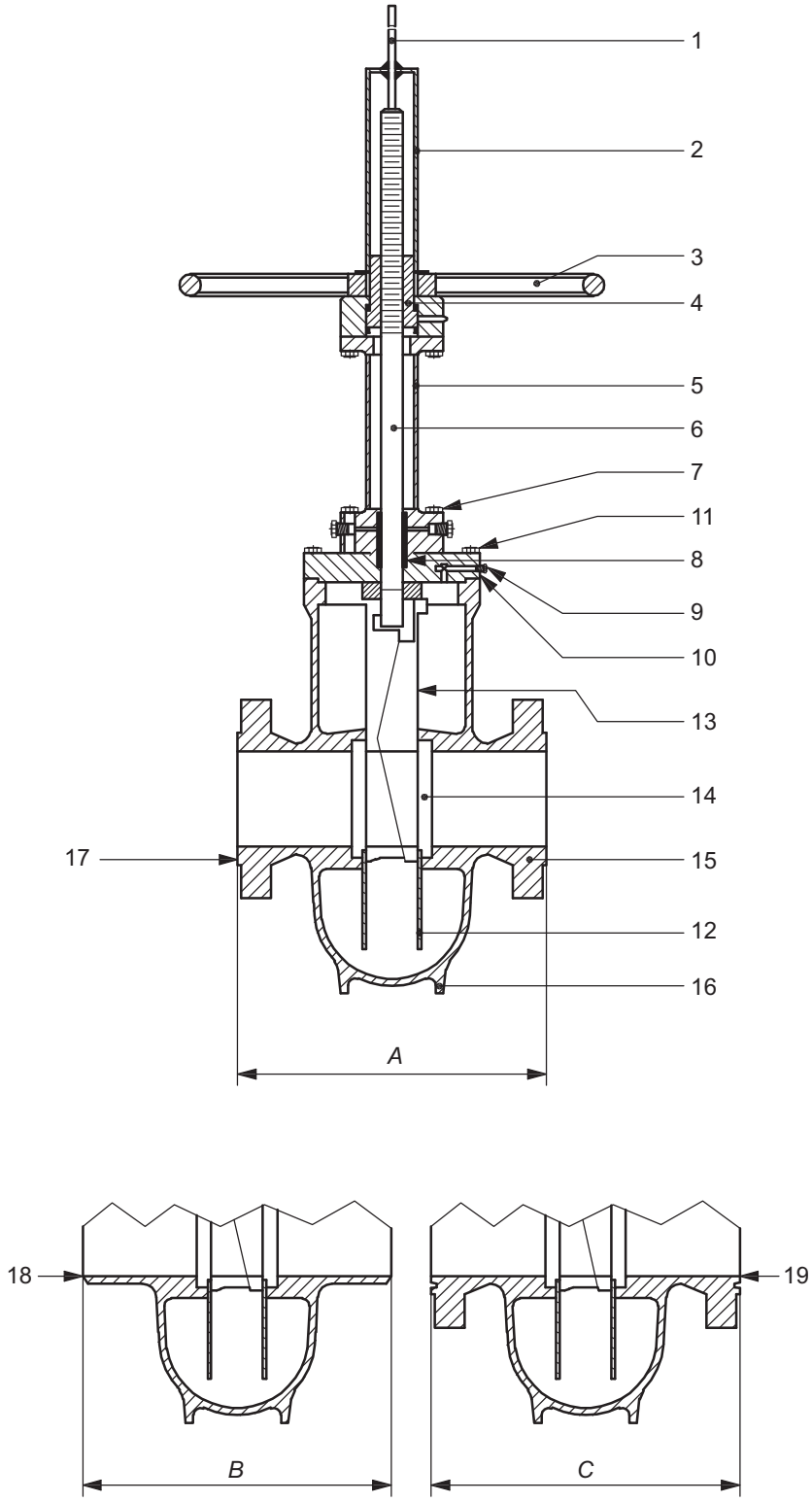

Key

1 stem indicator
2 stem enclosure
3 handwheel
4 yoke nut
5 yoke
6 stem
7 yoke bolting
8 stem packing
9 relief valve
10 bonnet
11 bonnet bolting
12 gate guide
13 gate assembly
14 seat ring
15 body
16 support ribs or legs
17 raised face
18 welding end
19 ring joint
A raised-face face-to-face dimension
B welding-end end-to-end dimension
C ring joint end-to-end dimension

NOTE See Table C.1 to Table C.5 for dimensions *A*, *B*, and *C*.

Figure B.1—Expanding-gate/Rising-stem Gate Valve

Provided by IHS
No reproduction or networking permitted without license from IHS
Licensee=ISATIS Group http://st2014.ir
Not for Resale, 10/27/2014 05:55:32 MDT

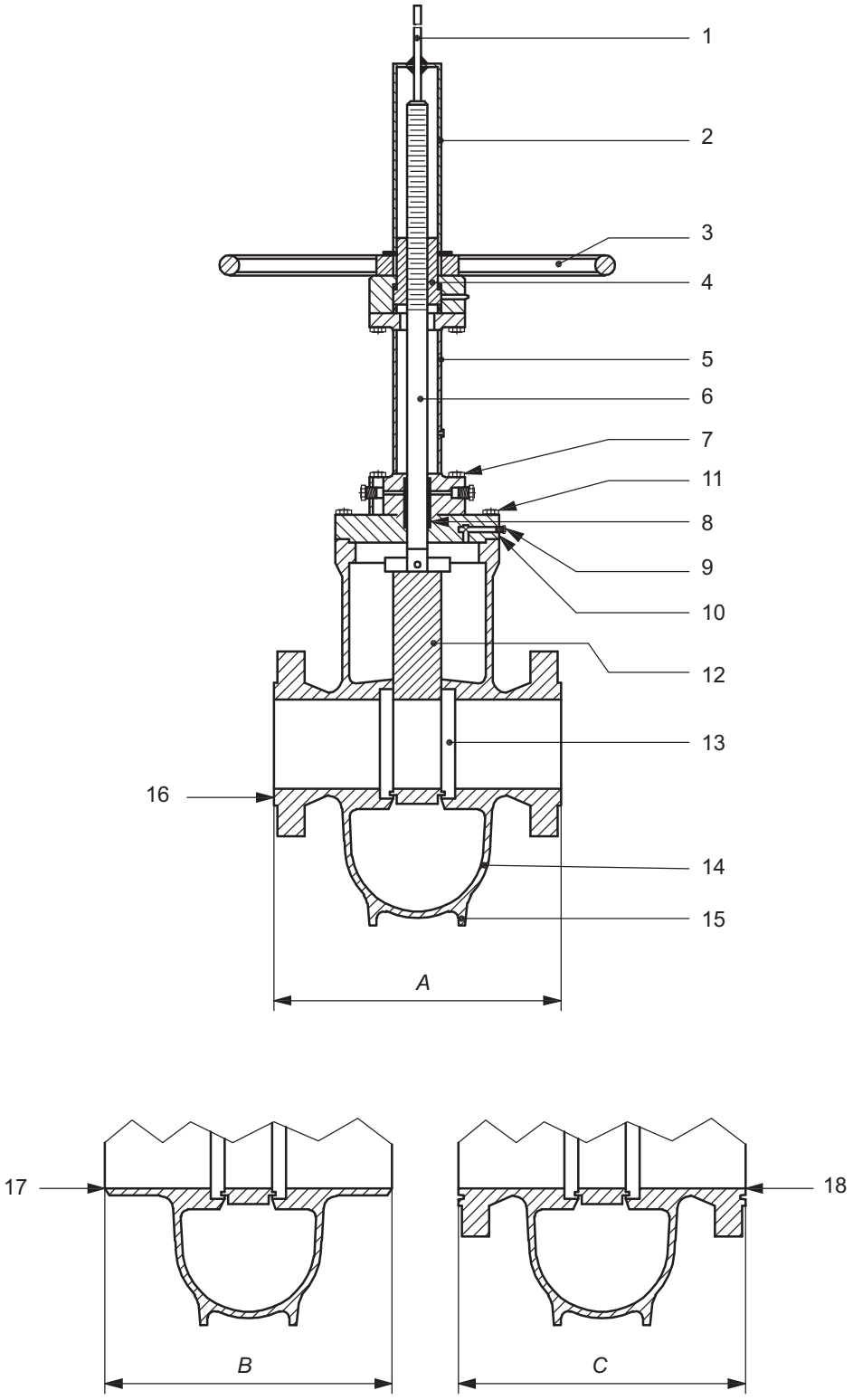

Key

1 stem indicator
2 stem enclosure
3 handwheel
4 yoke nut
5 yoke
6 stem
7 yoke bolting
8 stem packing
9 relief valve
10 bonnet
11 bonnet bolting
12 gate
13 seat ring
14 body
15 support ribs or legs
16 raised face
17 welding end
18 ring joint
A raised-face face-to-face dimension
B welding-end end-to-end dimension
C ring joint end-to-end dimension

NOTE See Table C.1 to Table C.5 for dimensions *A*, *B*, and *C*.

Figure B.2—Slab-gate/Through-conduit Rising-stem Gate Valve

Provided by IHS
No reproduction or networking permitted without license from IHS
Licensee=ISATIS Group http://st2014.ir
Not for Resale, 10/27/2014 05:55:32 MDT

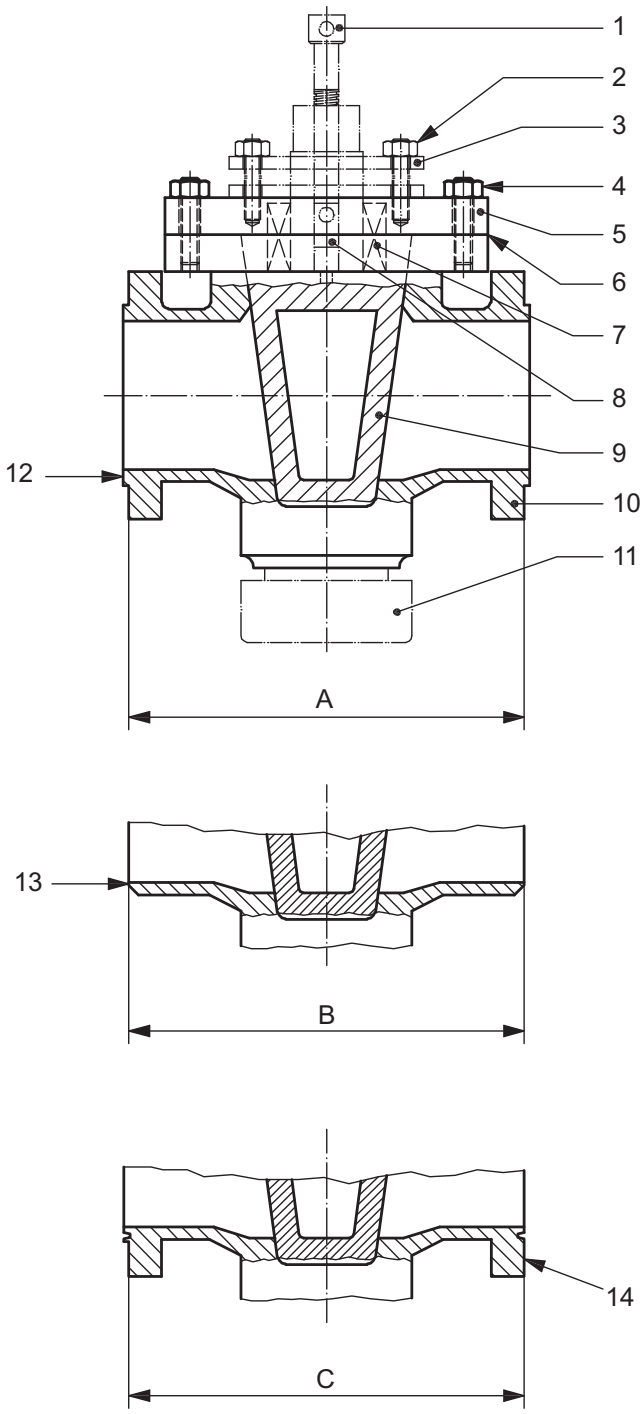

Key

1 lubricator screw
2 gland studs and nuts
3 gland
4 cover studs and nuts
5 cover
6 cover gasket
7 stem packing
8 lubricant check valve
9 plug
10 body
11 stop collar
12 raised face
13 welding end
14 ring joint
A raised-face face-to-face dimension
B welding-end end-to-end dimension
C ring joint end-to-end dimension

NOTE See Table C.1 to Table C.5 for dimensions *A*, *B*, and *C*.

Figure B.3—Plug Valve

Provided by IHS
No reproduction or networking permitted without license from IHS
Licensee=ISATIS Group http://st2014.ir
Not for Resale, 10/27/2014 05:55:32 MDT

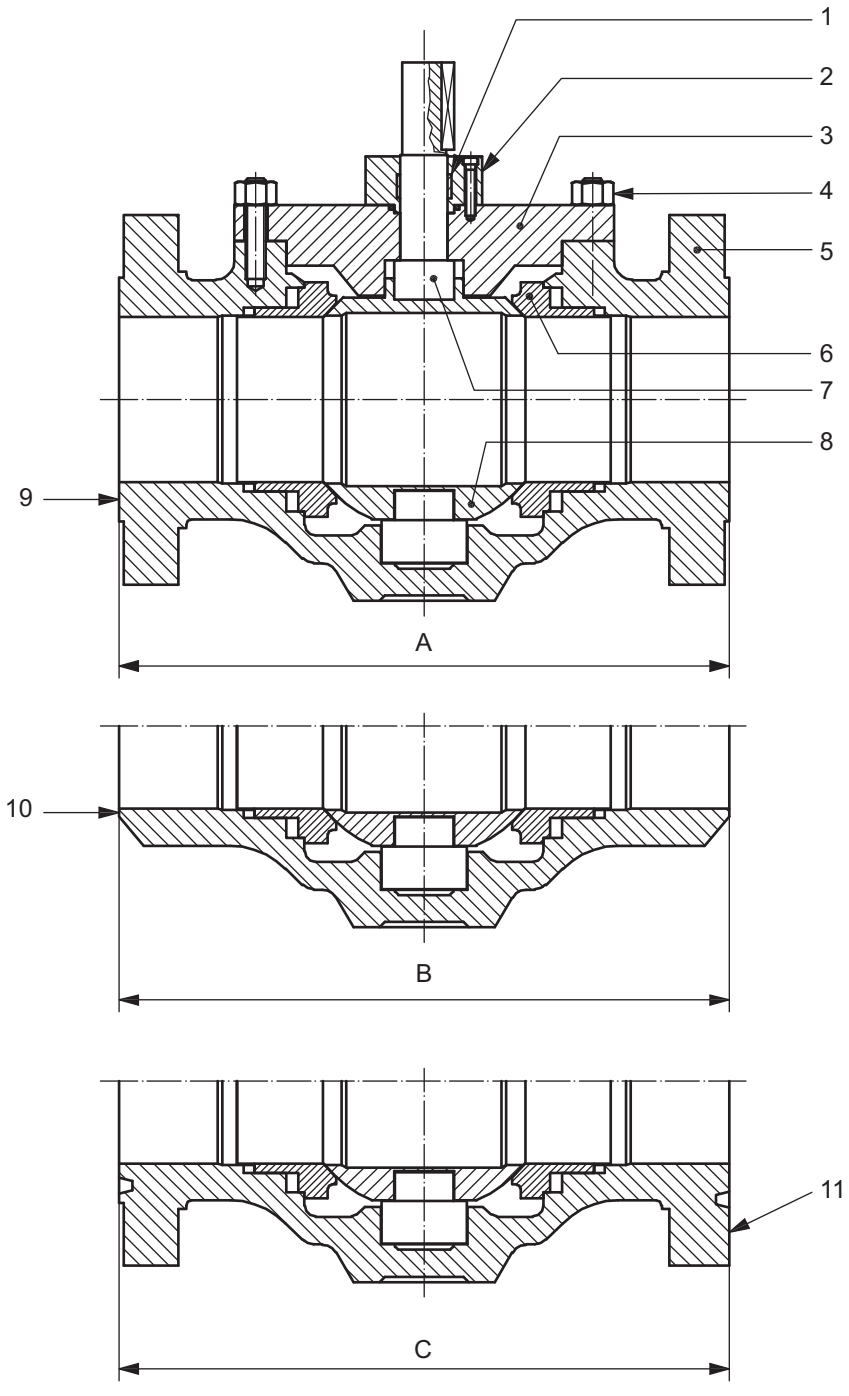

Key

1 stem seal
2 bonnet cover
3 bonnet
4 body bolting
5 body
6 seat ring
7 stem
8 ball
9 raised face
10 welding end
11 ring joint
A raised-face face-to-face dimension
B welding-end end-to-end dimension
C ring joint end-to-end dimension

NOTE See Table C.1 to Table C.5 for dimensions *A*, *B*, and *C*.

Figure B.4—Top-entry Trunnion Mounted Ball Valve

Provided by IHS
No reproduction or networking permitted without license from IHS
Licensee=ISATIS Group http://st2014.ir
Not for Resale, 10/27/2014 05:55:32 MDT

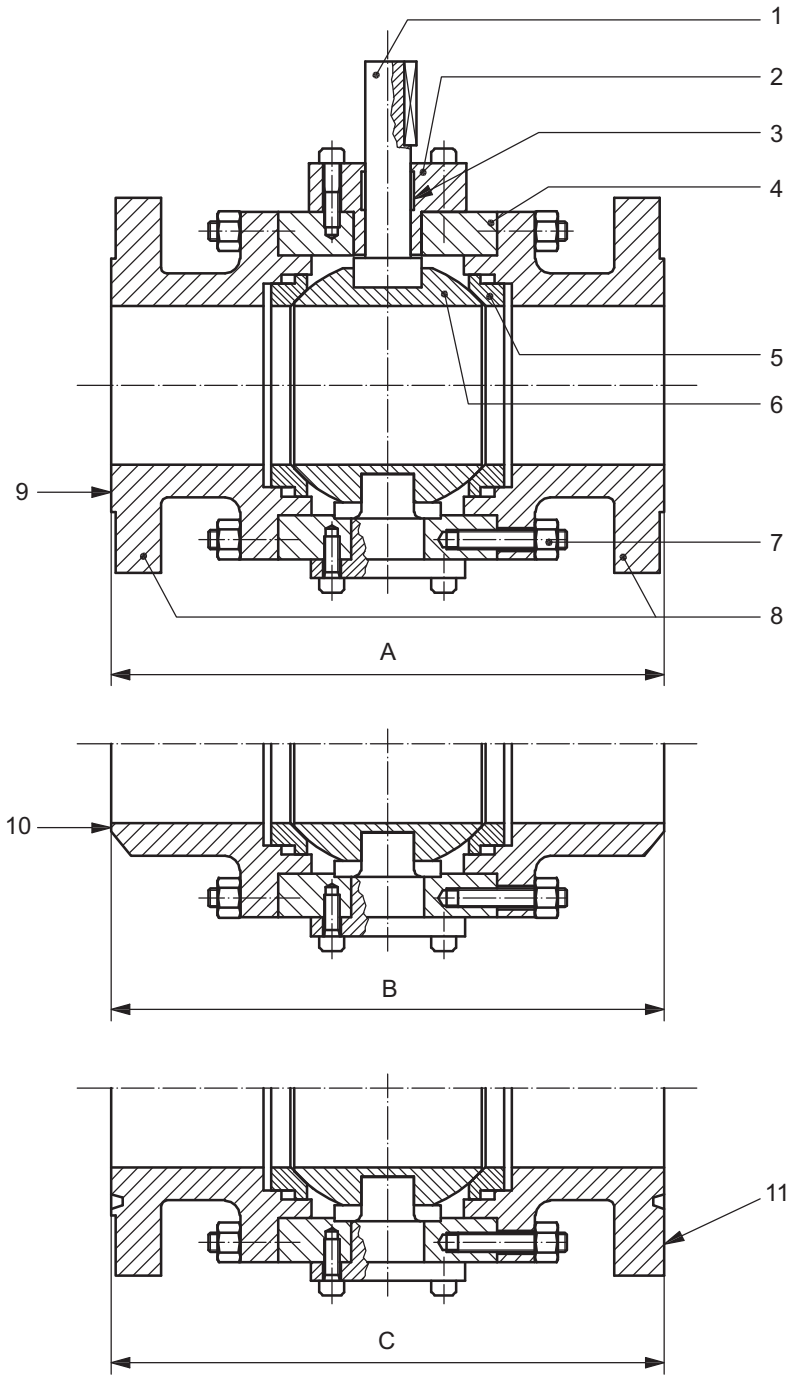

Key

1 stem
2 body cover
3 stem seal
4 body
5 seat ring
6 ball
7 body bolting
8 end connector
9 raised face
10 welding end
11 ring joint
A raised-face face-to-face dimension
B welding-end end-to-end dimension
C ring joint end-to-end dimension

NOTE See Table C.1 to Table C.5 for dimensions *A*, *B*, and *C*.

Figure B.5—Three-piece Trunnion Mounted Ball Valve

Provided by IHS
No reproduction or networking permitted without license from IHS
Licensee=ISATIS Group http://st2014.ir
Not for Resale, 10/27/2014 05:55:32 MDT

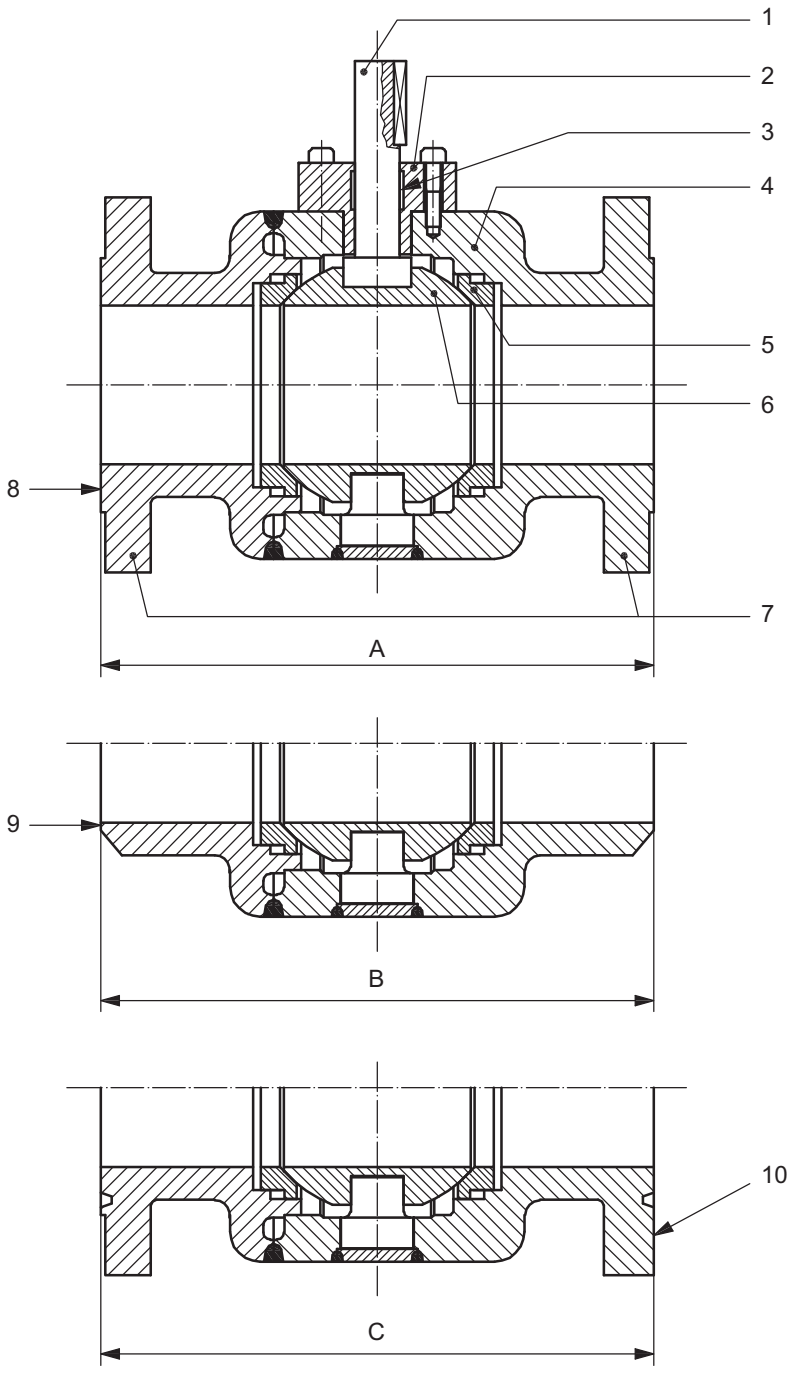

Key

1 stem
2 body cover
3 stem seal
4 body
5 seat ring
6 ball
7 end connector
8 raised face
9 welding end
10 ring joint
A raised-face face-to-face dimension
B welding-end end-to-end dimension
C ring joint end-to-end dimension

NOTE See Table C.1 to Table C.5 for dimensions *A*, *B*, and *C*.

Figure B.6—Welded-body Trunnion Mounted Ball Valve

Provided by IHS
No reproduction or networking permitted without license from IHS
Licensee=ISATIS Group http://st2014.ir
Not for Resale, 10/27/2014 05:55:32 MDT

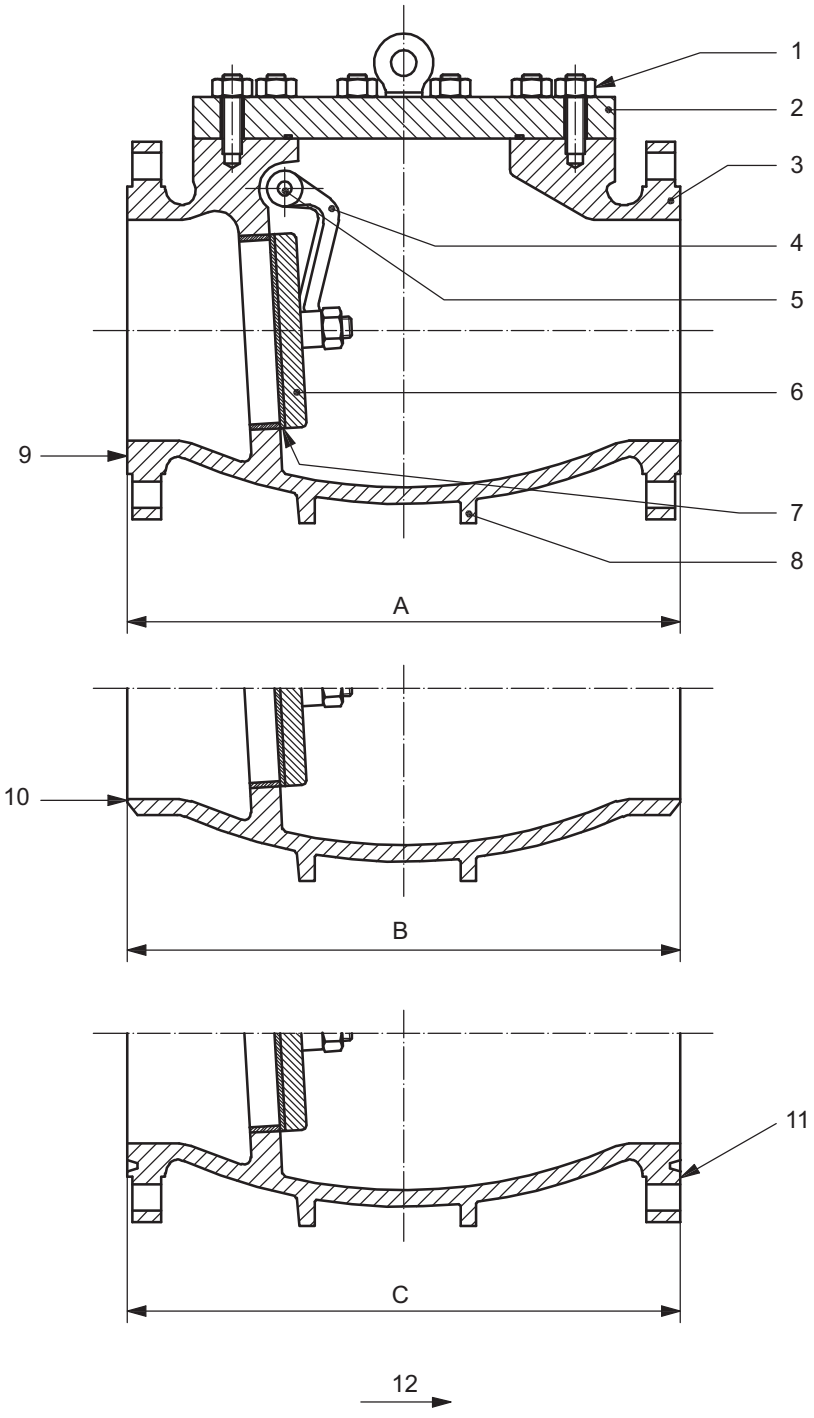

Key

1 cover bolting
2 cover
3 body
4 clapper disc arm
5 shaft
6 clapper disc
7 seat ring
8 support legs
9 raised face
10 welding end
11 ring joint
12 direction of flow
A raised-face face-to-face dimension
B welding-end end-to-end dimension
C ring joint end-to-end dimension

NOTE See Table C.1 to Table C.5 for dimensions *A*, *B*, and *C*.

Figure B.7—Reduced-opening Swing Check Valve

Provided by IHS
No reproduction or networking permitted without license from IHS
Licensee=ISATIS Group http://st2014.ir
Not for Resale, 10/27/2014 05:55:32 MDT

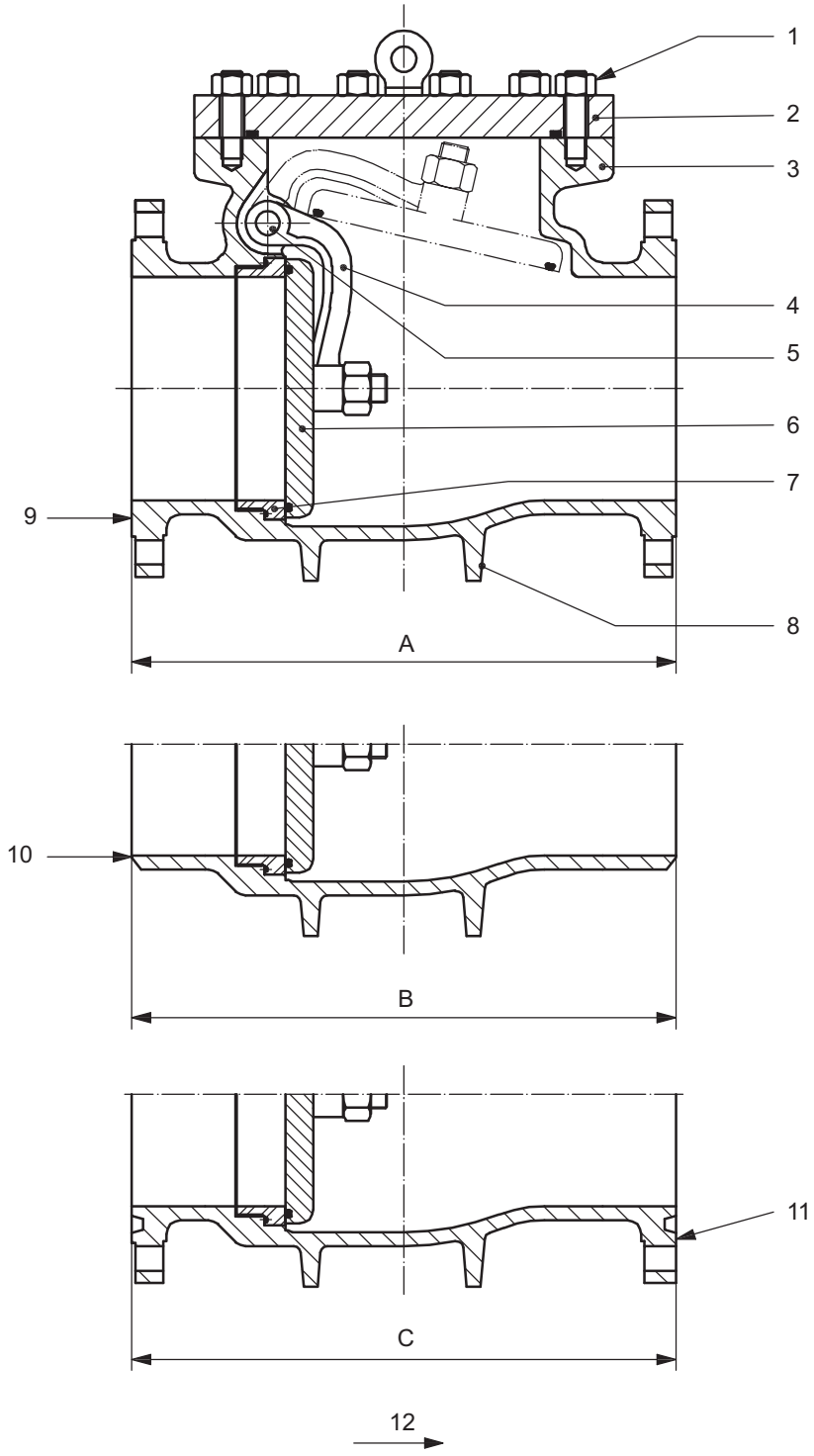

Key

1 cover bolting
2 cover
3 body
4 clapper disc arm
5 shaft
6 seat ring
7 clapper disc
8 support legs
9 raised face
10 welding end
11 ring joint
12 direction of flow
A raised-face face-to-face dimension
B welding-end end-to-end dimension
C ring joint end-to-end dimension

NOTE See Table C.1 to Table C.5 for dimensions *A*, *B*, and *C*.

Figure B.8—Full-opening Swing Check Valve

Provided by IHS
No reproduction or networking permitted without license from IHS
Licensee=ISATIS Group http://st2014.ir
Not for Resale, 10/27/2014 05:55:32 MDT

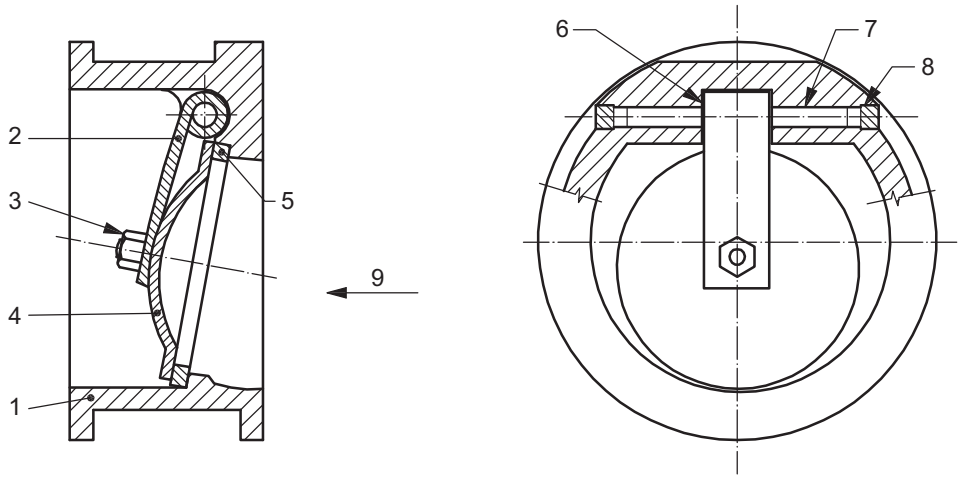

Key

1 body
2 hinge
3 nut
4 closure plate/stud assembly
5 seat ring
6 bearing spacers
7 hinge pin
8 hinge pin retainers
9 direction of flow

Figure B.9—Single-plate Wafer-type Check Valve, Long Pattern

Provided by IHS
No reproduction or networking permitted without license from IHS
Licensee=ISATIS Group http://st2014.ir
Not for Resale, 10/27/2014 05:55:32 MDT

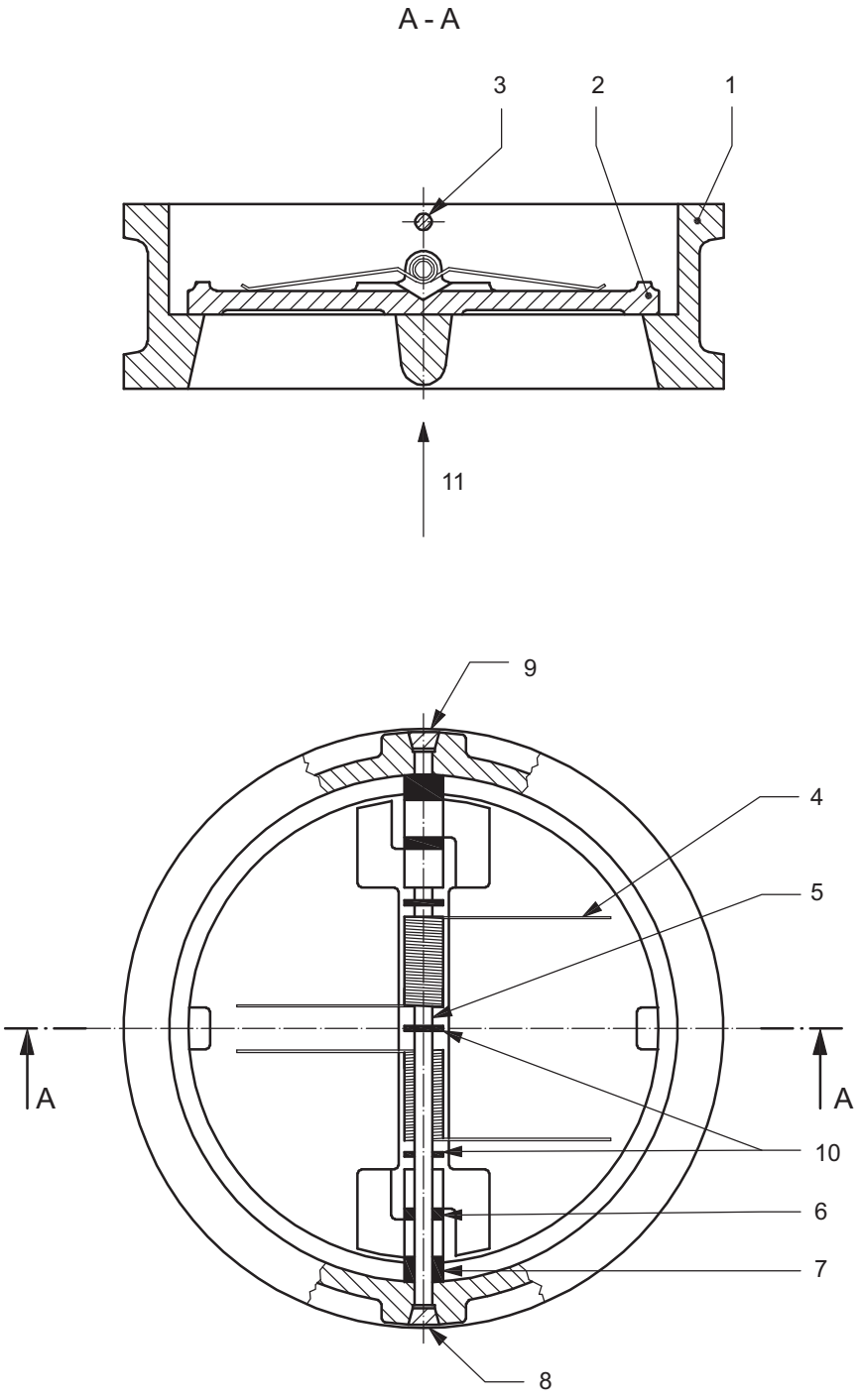

Key

1 body
2 closure plate
3 stop pin
4 spring
5 hinge pin
6 plate lug bearings
7 body lug bearings
8 stop pin retainers
9 hinge pin retainers
10 spring bearings
11 direction of flow

Figure B.10—Typical Dual-plate Wafer-type Check Valve, Long Pattern

Provided by IHS
No reproduction or networking permitted without license from IHS
Licensee=ISATIS Group http://st2014.ir
Not for Resale, 10/27/2014 05:55:32 MDT

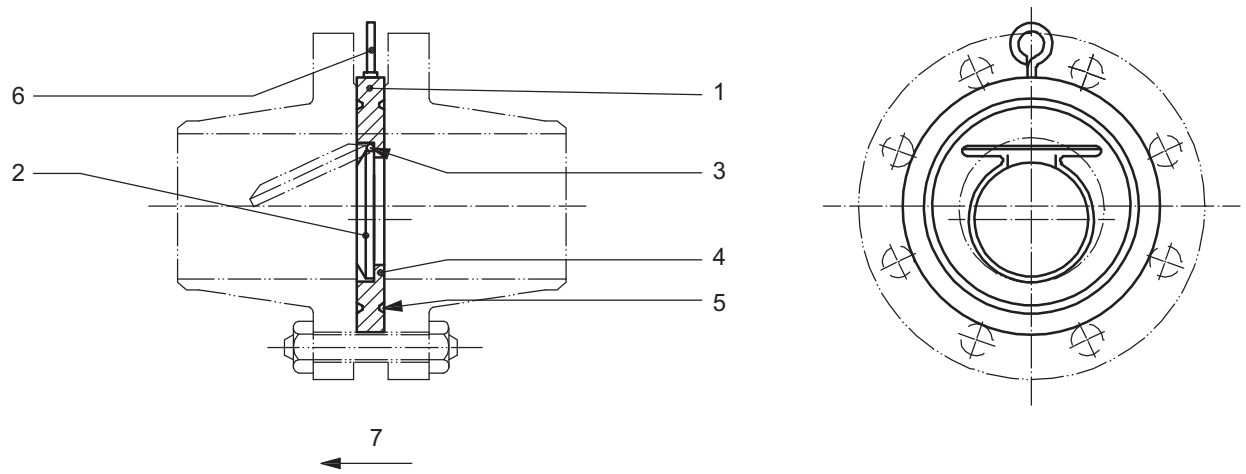

Key

1 body
2 clapper
3 pin
4 clapper seal
5 body seal
6 lifting eye
7 direction of flow

Figure B.11—Single-plate Wafer-type Check Valve, Short Pattern

Provided by IHS
No reproduction or networking permitted without license from IHS
Licensee=ISATIS Group http://st2014.ir
Not for Resale, 10/27/2014 05:55:32 MDT

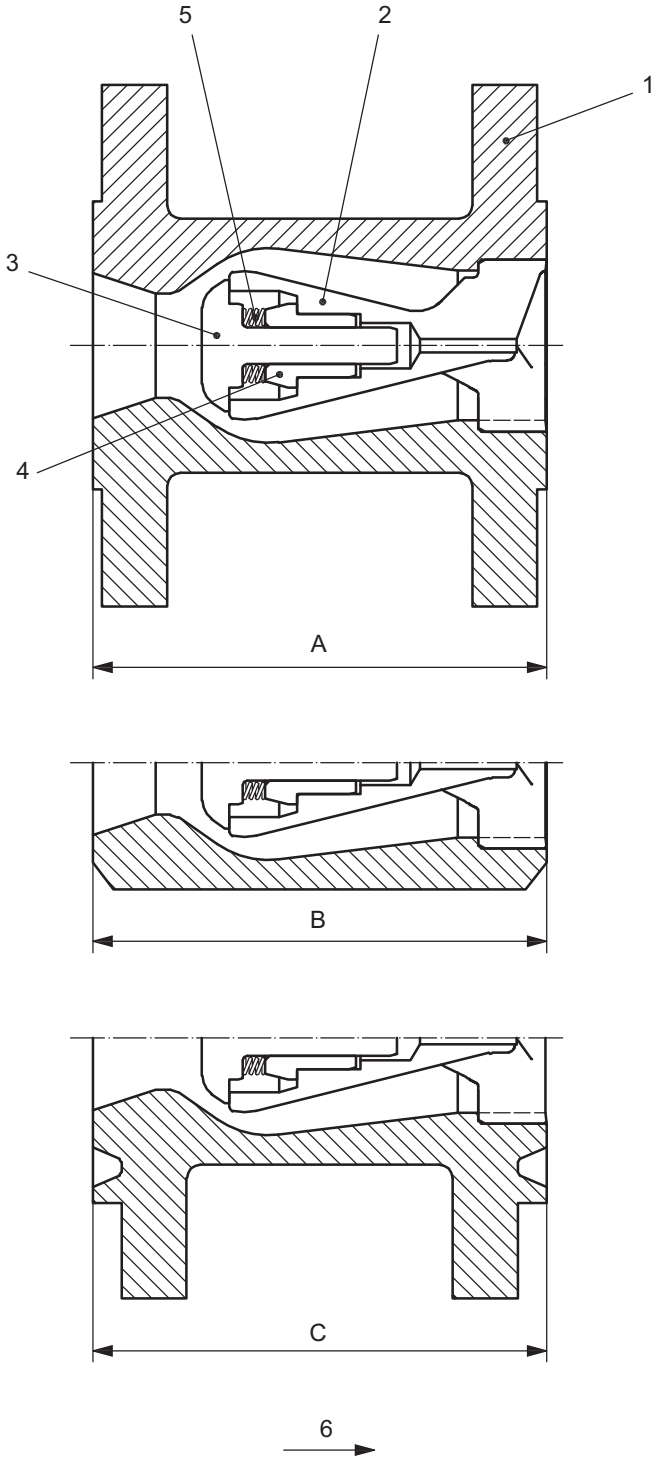

Key

1 body
2 rod guidance
3 disc
4 bearing
5 spring
6 flow direction
A raised-face face-to-face dimension
B welding-end end-to-end dimension
C ring joint end-to-end dimension

NOTE See Table C.1 to Table C.5 for dimensions A, B, and C.

Figure B.12—Axial Flow Check Valve

Provided by IHS
No reproduction or networking permitted without license from IHS
Licensee=ISATIS Group http://st2014.ir
Not for Resale, 10/27/2014 05:55:32 MDT

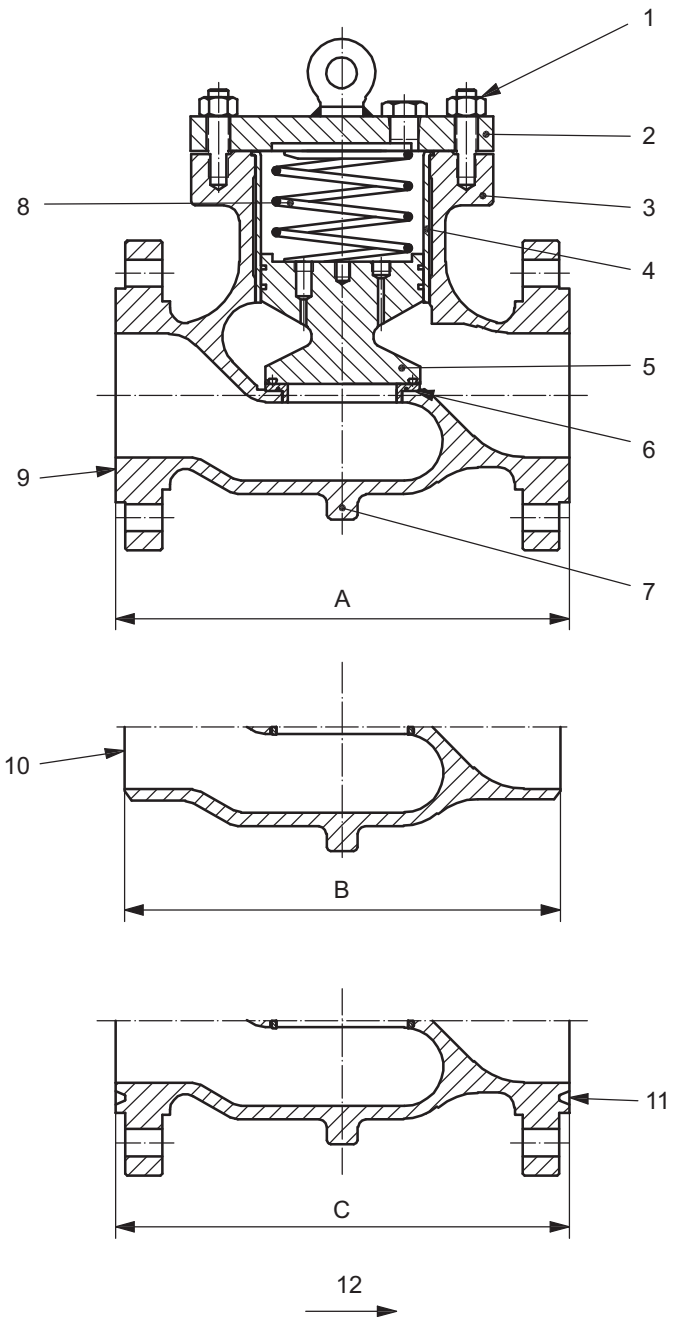

Key

1 cover bolting
2 cover
3 body
4 piston
5 liner
6 seat ring
7 support legs
9 raised face
10 welding end
11 ring joint
12 direction of flow
A raised-face face-to-face dimension
B welding-end end-to-end dimension
C ring joint end-to-end dimension

NOTE See Table C.1 to Table C.5 for dimensions *A*, *B*, and *C*.

Figure B.13—Piston Check Valve

Provided by IHS
No reproduction or networking permitted without license from IHS
Licensee=ISATIS Group http://st2014.ir
Not for Resale, 10/27/2014 05:55:32 MDT

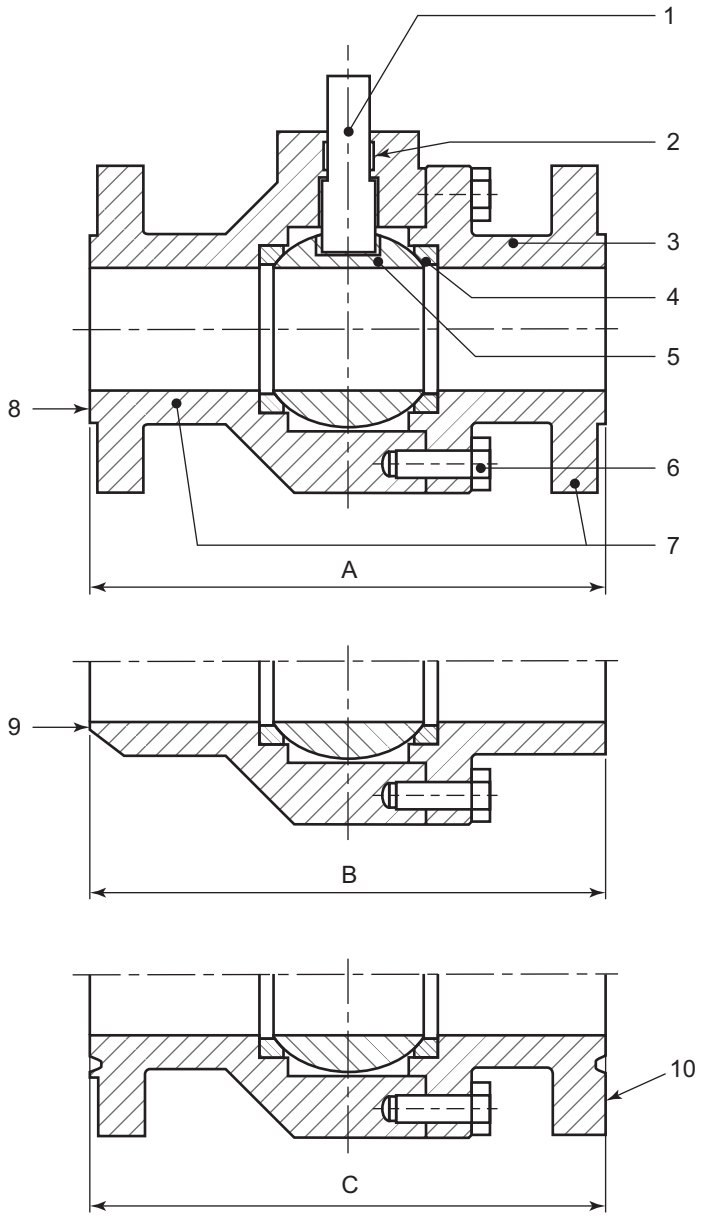

Key

1 stem
2 stem seal
3 body
4 seat ring
5 ball
6 body bolting
7 end connector
8 raised face
9 welding end
10 ring joint

A raised-face face-to-face dimension
B welding-end end-to-end dimension
C ring joint end-to-end dimension

NOTE See Table C.1 to Table C.5 for dimensions *A*, *B*, and *C*.

Figure B.14—Floating Ball Valve

Provided by IHS
No reproduction or networking permitted without license from IHS
Licensee=ISATIS Group http://st2014.ir
Not for Resale, 10/27/2014 05:55:32 MDT

Annex C
(normative)

Valve End-to-end and Face-to-face Dimensions

This annex shows valve end-to-end and face-to-face dimensions for gate, plug, ball, and check valves with raised face, welding end, and ring joint.

Table C.1—Gate Valves-Face-to-face (A) and End-to-end (B and C) Dimensions

Table C.2—Plug valves-Face-to-face (A) and End-to-end (B and C) Dimensions

Table C.3—Ball Valves-Face-to-face (A) and End-to-end (B and C) Dimensions

Table C.4—Check Valves, Full Opening and Reduced Types-Face-to-face (A) and End-to-end (B and C) Dimensions

Table C.5—Single- and Dual-plate, Long- and Short-pattern, Wafer-type Check Valves-Face-to-face Dimensions

Provided by IHS
No reproduction or networking permitted without license from IHS
Licensee=ISATIS Group http://st2014.ir
Not for Resale, 10/27/2014 05:55:32 MDT

Table C.1—Gate Valves—Face-to-face (*A*) and End-to-end (*B* and *C*) Dimensions

Dimensions in inches (millimeters)

NPS	DN	Raised Face *A*	Welding End *B*	Ring Joint *C*	Raised Face *A*	Welding End *B*	Ring Joint *C*
		Class 150			Class 300		
2	50	7.00 (178)	8.50 (216)	7.50 (191)	8.50 (216)	8.50 (216)	9.13 (232)
2 1/2	65	7.50 (191)	9.50 (241)	8.00 (203)	9.50 (241)	9.50 (241)	10.13 (257
3	80	8.00 (203)	11.13 (283)	8.50 (216)	11.13 (283)	11.13 (283)	11.75 (298)
4	100	9.00 (229)	12.00 (305)	9.50 (241)	12.00 (305)	12.00 (305)	12.63 (321)
6	150	10.50 (267)	15.88 (403)	11.00 (279)	15.88 (403)	15.88 (403)	16.50 (419)
8	200	11.50 (292)	16.50 (419)	12.00 (305)	16.50 (419)	16.50 (419)	17.13 (435)
10	250	13.00 (330)	18.00 (457)	13.50 (343)	18.00 (457)	18.00 (457)	18.63 (473)
12	300	14.00 (356)	19.75 (502)	14.50 (368)	19.75 (502)	19.75 (502)	20.38 (518)
14	350	15.00 (381)	22.50 (572)	15.50 (394)	30.00 (762)	30.00 (762)	30.63 (778)
16	400	16.00 (406)	24.00 (610)	16.50 (419)	33.00 (838)	33.00 (838)	33.63 (854)
18	450	17.00 (432)	26.00 (660)	17.50 (445)	36.00 (914)	36.00 (914)	36.63 (930)
20	500	18.00 (457)	28.00 (711)	18.50 (470)	39.00 (991)	39.00 (991)	39.75 (1010)
22	550	—	—	—	43.00 (1092)	43.00 (1092)	43.88 (1114)
24	600	20.00 (508)	32.00 (813)	20.50 (521)	45.00 (1143)	45.00 (1143)	45.88 (1165)
26	650	22.00 (559)	34.00 (864)	—	49.00 (1245)	49.00 (1245)	50.00 (1270)
28	700	24.00 (610)	36.00 (914)	—	53.00 (1346)	53.00 (1346)	54.00 (1372)
30	750	24.00 (610) [a]	36.00 (914)	—	55.00 (1397)	55.00 (1397)	56.00 (1422)
32	800	28.00 (711)	38.00 (965)	—	60.00 (1524)	60.00 (1524)	61.13 (1553)
34	850	30.00 (762)	40.00 (1016)	—	64.00 (1626)	64.00 (1626)	65.13 (1654)
36	900	28.00 (711) [b]	40.00 (1016)	—	68.00 (1727)	68.00 (1727)	69.13 (1756)

--`,,`,,`-`-`,,`,,`,`,,`---

Provided by IHS
No reproduction or networking permitted without license from IHS

Licensee=ISATIS Group http://st2014.ir
Not for Resale, 10/27/2014 05:55:32 MDT

Table C.1—Gate Valves—Face-to-face (*A*) and End-to-end (*B* and *C*) Dimensions (Continued)

Dimensions in inches (millimeters)

NPS	DN	Raised Face *A*	Welding End *B*	Ring Joint *C*	Raised Face *A*	Welding End *B*	Ring Joint *C*
		Class 400			Class 600		
2	50	11.50 (292)	11.50 (292)	11.63 (295)	11.50 (292)	11.50 (292)	11.63 (295)
2 1/2	65	13.00 (330)	13.00 (330)	13.13 (333)	13.00 (330)	13.00 (330)	13.13 (333)
3	80	14.00 (356)	14.00 (356)	14.13 (359)	14.00 (356)	14.00 (356)	14.13 (359)
4	100	16.00 (406)	16.00 (406)	16.13 (410)	17.00 (432)	17.00 (432)	17.13 (435)
6	150	19.50 (495)	19.50 (495)	19.63 (498)	22.00 (559)	22.00 (559)	22.13 (562)
8	200	23.50 (597)	23.50 (597)	23.63 (600)	26.00 (660)	26.00 (660)	26.13 (664)
10	250	26.50 (673)	26.50 (673)	26.63 (676)	31.00 (787)	31.00 (787)	31.13 (791)
12	300	30.00 (762)	30.00 (762)	30.13 (765)	33.00 (838)	33.00 (838)	33.13 (841)
14	350	32.50 (826)	32.50 (826)	32.63 (829)	35.00 (889)	35.00 (889)	35.13 (892)
16	400	35.50 (902)	35.50 (902)	35.63 (905)	39.00 (991)	39.00 (991)	39.13 (994)
18	450	38.50 (978)	38.50 (978)	38.63 (981)	43.00 (1092)	43.00 (1092)	43.13 (1095)
20	500	41.50 (1054)	41.50 (1054)	41.75 (1060)	47.00 (1194)	47.00 (1194)	47.25 (1200)
22	550	45.00 (1143)	45.00 (1143)	45.38 (1153)	51.00 (1295)	51.00 (1295)	51.38 (1305)
24	600	48.50 (1232)	48.50 (1232)	48.88 (1241)	55.00 (1397)	55.00 (1397)	55.38 (1407)
26	650	51.50 (1308)	51.50 (1308)	52.00 (1321)	57.00 (1448)	57.00 (1448)	57.50 (1461)
28	700	55.00 (1397)	55.00 (1397)	55.50 (1410)	61.00 (1549)	61.00 (1549)	61.50 (1562)
30	750	60.00 (1524)	60.00 (1524)	60.50 (1537)	65.00 (1651)	65.00 (1651)	65.50 (1664)
32	800	65.00 (1651)	65.00 (1651)	65.63 (1667)	70.00 (1778)	70.00 (1778)	70.63 (1794)
34	850	70.00 (1778)	70.00 (1778)	70.63 (1794)	76.00 (1930)	76.00 (1930)	76.63 (1946)
36	900	74.00 (1880)	74.00 (1880)	74.63 (1895)	82.00 (2083)	82.00 (2083)	82.63 (2099)

Provided by IHS
No reproduction or networking permitted without license from IHS
Licensee=ISATIS Group http://st2014.ir
Not for Resale, 10/27/2014 05:55:32 MDT

Table C.1—Gate Valves—Face-to-face (*A*) and End-to-end (*B* and *C*) Dimensions (Continued)

Dimensions in inches (millimeters)

NPS	DN	Raised Face *A*	Welding End *B*	Ring Joint *C*	Raised Face *A*	Welding End *B*	Ring Joint *C*
		Class 900			Class 1500		
2	50	14.50 (368)	14.50 (368)	14.63 (371)	14.50 (368)	14.50 (368)	14.63 (371)
2 1/2	65	16.50 (419)	16.50 (419)	16.63 (422)	16.50 (419)	16.50 (419)	16.63 (422)
3	80	15.00 (381)	15.00 (381)	15.13 (384)	18.50 (470)	18.50 (470)	18.63 (473)
4	100	18.00 (457)	18.00 (457)	18.13 (460)	21.50 (546)	21.50 (546)	21.63 (549)
6	150	24.00 (610)	24.00 (610)	24.13 (613)	27.75 (705)	27.75 (705)	28.00 (711)
8	200	29.00 (737)	29.00 (737)	29.13 (740)	32.75 (832)	32.75 (832)	33.13 (841)
10	250	33.00 (838)	33.00 (838)	33.13 (841)	39.00 (991)	39.00 (991)	39.38 (1000)
12	300	38.00 (965)	38.00 (965)	38.13 (968)	44.50 (1130)	44.50 (1130)	45.13 (1146)
14	350	40.50 (1029)	40.50 (1029)	40.88 (1038)	49.50 (1257)	49.50 (1257)	50.25 (1276)
16	400	44.50 (1130)	44.50 (1130)	44.88 (1140)	54.50 (1384)	54.50 (1384)	55.38 (1407)
18	450	48.00 (1219)	48.00 (1219)	48.50 (1232)	60.50 (1537)	60.50 (1537)	61.38 (1559)
20	500	52.00 (1321)	52.00 (1321)	52.50 (1334)	65.50 (1664)	65.50 (1664)	66.38 (1686)
22	550	—	—	—	—	—	—
24	60	61.00 (1549)	61.00 (1549)	61.75 (1568)	76.50 (1943)	76.50 (1943)	77.63 (1972)

Provided by IHS
No reproduction or networking permitted without license from IHS
Licensee=ISATIS Group http://st2014.ir
Not for Resale, 10/27/2014 05:55:32 MDT

Table C.1—Gate Valves—Face-to-face (*A*) and End-to-end (*B* and *C*) Dimensions (Continued)

Dimensions in inches (millimeters)

NPS	DN	Raised Face *A*	Welding End *B*	Ring Joint *C*
		Class 2500		
2	50	17.75 (451)	17.75 (451)	17.88 (454)
2 1/2	65	20.00 (508)	20.00 (508)	20.25 (514)
3	80	22.75 (578)	22.75 (578)	23.00 (584)
4	100	26.50 (673)	26.50 (673)	26.88 (683)
6	150	36.00 (914)	36.00 (914)	36.50 (927)
8	200	40.25 (1022)	40.25 (1022)	40.88 (1038)
10	250	50.00 (1270)	50.00 (1270)	50.88 (1292)
12	300	56.00 (1422)	56.00 (1422)	56.88 (1445)

[a] Through-conduit valves shall be 26.00 in. (660 mm).

[b] Through-conduit valves shall be 32.00 in. (813 mm).

Tolerance: ±1/16 in. (1.59 mm) on valve sizes 10 in. and smaller
±1/8 in. (3.18 mm) on valve sizes 12 in. and larger

Provided by IHS
No reproduction or networking permitted without license from IHS
Licensee=ISATIS Group http://st2014.ir
Not for Resale, 10/27/2014 05:55:32 MDT

Table C.2—Plug Valves—Face-to-face (*A*) and End-to-end (*B* and *C*) Dimensions

Dimensions in inches (millimeters)

NPS	DN	Short Pattern			Regular Pattern			Venturi Pattern			Round Port, Full Bore		
		Raised Face *A*	Welding End *B*	Ring Joint *C*	Raised Face *A*	Welding End *B*	Ring Joint *C*	Raised Face *A*	Welding End *B*	Ring Joint *C*	Raised Face *A*	Welding End *B*	Ring Joint *C*
		Class 150											
2	50	7.00 (178)	10.50 (267)	7.50 (191)	—	—	—	—	—	—	10.50 (267)	—	11.00 (279)
2 1/2	65	7.50 (191)	12.00 (305)	8.00 (203)	—	—	—	—	—	—	11.75 (298)	—	12.25 (311)
3	80	8.00 (203)	13.00 (330)	8.50 (216)	—	—	—	—	—	—	13.50 (343)	—	14.00 (356)
4	100	9.00 (229)	14.00 (356)	9.50 (241)	—	—	—	—	—	—	17.00 (432)	—	17.50 (445)
6	150	10.50 (267)	18.00 (457)	11.00 (279)	15.50 (394)	—	16.00 (406)	—	—	—	21.50 (546)	—	22.00 (559)
8	200	11.50 (292)	20.50 (521)	12.00 (305)	18.00 (457)	—	18.50 (470)	—	—	—	24.50 (622)	—	25.00 (635)
10	250	13.00 (330)	22.00 (559)	13.50 (343)	21.00 (533)	—	21.50 (546)	21.00 (533)	22.00 (559)	21.50 (546)	26.00 (660)	—	26.50 (673)
12	300	14.00 (356)	25.00 (635)	14.50 (368)	24.00 (610)	—	24.50 (622)	24.00 (610)	25.00 (635)	24.50 (622)	30.00 (762)	—	30.50 (775)
14	8050	—	—	—	—	—	—	27.00 (686)	27.00 (686)	27.50 (699)	—	—	—
16	400	—	—	—	—	—	—	30.00 (762)	30.00 (762)	30.50 (775)	—	—	—
18	450	—	—	—	—	—	—	34.00 (864)	34.00 (864)	34.50 (876)	—	—	—
20	500	—	—	—	—	—	—	36.00 (914)	36.00 (914)	36.50 (927)	—	—	—
24	600	—	—	—	—	—	—	42.00 (1067)	42.00 (1067)	42.50 (1080)	—	—	—

Provided by IHS
No reproduction or networking permitted without license from IHS
Licensee=ISATIS Group http://st2014.ir
Not for Resale, 10/27/2014 05:55:32 MDT

Table C.2—Plug Valves—Face-to-face (*A*) and End-to-end (*B* and *C*) Dimensions (Continued)

Dimensions in inches (millimeters)

NPS	DN	Short Pattern			Regular Pattern			Venturi Pattern			Round Port, Full Bore		
		Raised Face *A*	Welding End *B*	Ring Joint *C*	Raised Face *A*	Welding End *B*	Ring Joint *C*	Raised Face *A*	Welding End *B*	Ring Joint *C*	Raised Face *A*	Welding End *B*	Ring Joint *C*
		Class 350											
2	50	8.50 (216)	10.50 (267)	9.13 (232)	—	—	—	—	—	—	11.13 (283)	11.13 (283)	11.75 (298)
2 1/2	65	9.50 (241)	12.00 (305)	10.13 (257)	—	—	—	—	—	—	13.00 (330)	13.00 (330)	13.63 (346)
3	80	11.13 (283)	13.00 (330)	11.75 (298)	—	—	—	—	—	—	15.25 (387)	15.25 (387)	15.88 (403)
4	100	12.00 (305)	14.00 (356)	12.63 (321)	—	—	—	—	—	—	18.00 (457)	18.00 (457)	18.63 (473)
6	150	15.88 (403)	18.00 (457)	16.50 (419)	15.88 (403)	—	16.50 (419)	15.88 (403)	18.00 (457)	16.50 (419)	22.00 (559)	22.00 (559)	22.63 (575)
8	200	16.50 (419)	20.50 (521)	17.13 (435)	19.75 (502)	—	20.38 (518)	16.50 (419)	20.50 (521)	17.13 (435)	27.00 (686)	27.00 (686)	27.63 (702)
10	250	18.00 (457)	22.00 (559)	18.63 (473)	22.38 (568)	—	23.00 (584)	18.00 (457)	22.00 (559)	18.63 (473)	32.50 (826)	32.50 (826)	33.13 (841)
12	300	19.75 (502)	25.00 (635)	20.38 (518)	—	—	—	19.75 (502)	25.00 (635)	20.38 (518)	38.00 (965)	38.00 (965)	38.63 (981)
14	350	—	—	—	—	—	—	30.00 (762)	30.00 (762)	30.63 (778)	—	—	—
16	400	—	—	—	—	—	—	33.00 (838)	33.00 (838)	33.63 (854)	—	—	—
18	450	—	—	—	36.00 (914)	—	36.63 (930)	36.00 (914)	36.00 (914)	36.63 (930)	—	—	—
20	500	—	—	—	39.00 (991)	—	39.75 (1010)	39.00 (991)	39.00 (991)	39.75 (1010)	—	—	—
22	550	—	—	—	43.00 (1092)	—	43.88 (1114)	43.00 (1092)	43.00 (1092)	43.88 (1114)	—	—	—
24	600	—	—	—	45.00 (1143)	—	45.88 (1165)	45.00 (1143)	45.00 (1143)	45.88 (1165)	—	—	—
26	650	—	—	—	49.00 (1245)	—	50.00 (1270)	49.00 (1245)	49.00 (1245)	50.00 (1270)	—	—	—
28	700	—	—	—	53.00 (1346)	—	54.00 (1372)	53.00 (1346)	53.00 (1346)	54.00 (1372)	—	—	—
30	750	—	—	—	55.00 (1397)	—	56.00 (1422)	55.00 (1397)	55.00 (1397)	56.00 (1422)	—	—	—
32	800	—	—	—	60.00 (1524)	—	61.13 (1553)	60.00 (1524)	60.00 (1524)	61.13 (1553)	—	—	—
34	850	—	—	—	64.00 (1626)	—	65.13 (1654)	64.00 (1626)	64.00 (1626)	65.13 (1654)	—	—	—
36	900	—	—	—	68.00 (1727)	—	69.13 (1756)	68.00 (1727)	68.00 (1727)	69.13 (1756)	—	—	—

Provided by IHS
No reproduction or networking permitted without license from IHS
Licensee=ISATIS Group http://st2014.ir
Not for Resale, 10/27/2014 05:55:32 MDT

Table C.2—Plug Valves—Face-to-face (*A*) and End-to-end (*B* and *C*) Dimensions (Continued)

Dimensions in inches (millimeters)

NPS	DN	Short Pattern			Regular Pattern			Venturi Pattern			Round Port, Full Bore		
		Raised Face *A*	Welding End *B*	Ring Joint *C*	Raised Face *A*	Welding End *B*	Ring Joint *C*	Raised Face *A*	Welding End *B*	Ring Joint *C*	Raised Face *A*	Welding End *B*	Ring Joint *C*
		Class 400											
2	50	—	—	—	11.50 (292)	11.50 (292)	11.63 (295)	—	—	—	13.00 (330)	—	13.13 (333)
2 1/2	65	—	—	—	13.00 (330)	13.00 (330)	13.13 (333)	—	—	—	15.00 (381)	—	15.13 (384)
3	80	—	—	—	14.00 (356)	14.00 (356)	14.13 (359)	—	—	—	17.50 (445)	—	17.63 (448)
4	100	—	—	—	16.00 (406)	16.00 (406)	16.13 (410)	—	—	—	19.00 (483)	22.00 (559)	19.13 (486)
6	150	—	—	—	19.50 (495)	19.50 (495)	19.63 (498)	19.50 (495)	19.50 (495)	19.63 (498)	24.00 (610)	28.00 (711)	24.13 (613)
8	200	—	—	—	23.50 (597)	23.50 (597)	23.63 (600)	23.50 (597)	23.50 (597)	23.63 (600)	29.00 (737)	33.25 (845)	29.13 (740)
10	250	—	—	—	26.50 (673)	26.50 (673)	26.63 (676)	26.50 (673)	26.50 (673)	26.63 (676)	35.00 (889)	35.00 (889)	35.13 (892)
12	300	—	—	—	30.00 (762)	30.00 (762)	30.13 (765)	30.00 (762)	30.00 (762)	30.13 (765)	40.00 (1016)	40.00 (1016)	40.13 (1019)
14	350	—	—	—	—	—	—	32.50 (826)	32.50 (826)	32.63 (829)	—	—	—
16	400	—	—	—	—	—	—	35.50 (902)	35.50 (902)	35.63 (905)	—	—	—
18	450	—	—	—	—	—	—	38.50 (978)	38.50 (978)	38.63 (981)	—	—	—
20	500	—	—	—	—	—	—	41.50 (1054)	41.50 (1054)	41.75 (1060)	—	—	—
22	550	—	—	—	—	—	—	45.00 (1143)	45.00 (1143)	45.63 (1159)	—	—	—
24	600	—	—	—	—	—	—	48.50 (1232)	48.50 (1232)	48.88 (1241)	—	—	—
26	650	—	—	—	—	—	—	51.50 (1308)	51.50 (1308)	52.00 (1321)	—	—	—
28	700	—	—	—	—	—	—	55.00 (1397)	55.00 (1397)	55.50 (1410)	—	—	—
30	750	—	—	—	—	—	—	60.00 (1524)	60.00 (1524)	60.50 (1537)	—	—	—
32	800	—	—	—	—	—	—	65.00 (1651)	65.00 (1651)	65.63 (1667)	—	—	—
34	850	—	—	—	—	—	—	70.00 (1778)	70.00 (1778)	70.63 (1794)	—	—	—
36	900	—	—	—	—	—	—	74.00 (1880)	74.00 (1880)	74.63 (1895)	—	—	—

Provided by IHS
No reproduction or networking permitted without license from IHS
Licensee=ISATIS Group http://st2014.ir
Not for Resale, 10/27/2014 05:55:32 MDT

Table C.2—Plug Valves—Face-to-face (*A*) and End-to-end (*B* and *C*) Dimensions (Continued)

Dimensions in inches (millimeters)

NPS	DN	Regular Pattern			Venturi Pattern			Round Port, Full Bore		
		Raised Face *A*	Welding End *B*	Ring Joint *C*	Raised Face *A*	Welding End *B*	Ring Joint *C*	Raised Face *A*	Welding End *B*	Ring Joint *C*
		Class 600								
2	50	11.50 (292)	11.50 (292)	11.63 (295)	—	—	—	13.00 (330)	—	13.13 (333)
2 1/2	65	13.00 (330)	13.00 (330)	13.13 (333)	—	—	—	15.00 (381)	—	15.13 (384)
3	80	14.00 (356)	14.00 (356)	14.13 (359)	—	—	—	17.50 (445)	—	17.63 (448)
4	100	17.00 (432)	17.00 (432)	17.13 (435)	—	—	—	20.00 (508)	22.00 (559)	20.13 (511)
6	150	22.00 (559)	22.00 (559)	22.13 (562)	22.00 (559)	22.00 (559)	22.13 (562)	26.00 (660)	28.00 (711)	26.13 (664)
8	200	26.00 (660)	26.00 (660)	26.13 (664)	26.00 (660)	26.00 (660)	26.13 (664)	31.25 (794)	33.25 (845)	31.38 (797)
10	250	31.00 (787)	31.00 (787)	31.13 (791)	31.00 (787)	31.00 (787)	31.13 (791)	37.00 (940)	40.00 (1016)	37.13 (943)
12	300	—	—	—	33.00 (838)	33.00 (838)	33.13 (841)	42.00 (1067)	42.00 (1067)	42.13 (1070)
14	350	—	—	—	35.00 (889)	35.00 (889)	35.13 (892)	—	—	—
16	400	—	—	—	39.00 (991)	39.00 (991)	39.13 (994)	—	—	—
18	450	—	—	—	43.00 (1092)	43.00 (1092)	43.13 (1095)	—	—	—
20	500	—	—	—	47.00 (1194)	47.00 (1194)	47.25 (1200)	—	—	—
22	550	—	—	—	51.00 (1295)	51.00 (1295)	51.38 (1305)	—	—	—
24	600	—	—	—	55.00 (1397)	55.00 (1397)	55.38 (1407)	—	—	—
26	650	—	—	—	57.00 (1448)	57.00 (1448)	57.50 (1461)	—	—	—
30	750	—	—	—	65.00 (1651)	65.00 (1651)	65.50 (1664)	—	—	—
32	800	—	—	—	70.00 (1778)	70.00 (1778)	70.63 (1794)	—	—	—
34	850	—	—	—	76.00 (1930)	76.00 (1930)	76.63 (1946)	—	—	—
36	900	—	—	—	82.00 (2083)	82.00 (2083)	82.63 (2099)	—	—	—

Provided by IHS
No reproduction or networking permitted without license from IHS
Licensee=ISATIS Group http://st2014.ir
Not for Resale, 10/27/2014 05:55:32 MDT

Table C.2—Plug Valves—Face-to-face (*A*) and End-to-end (*B* and *C*) Dimensions (Continued)

Dimensions in inches (millimeters)

NPS	DN	Regular Pattern			Venturi Pattern			Round Port, Full Bore		
		Raised Face *A*	Welding End *B*	Ring Joint *C*	Raised Face *A*	Welding End *B*	Ring Joint *C*	Raised Face *A*	Welding End *B*	Ring Joint *C*
		Class 900								
2	50	14.50 (368)	—	14.63 (371)	—	—	—	15.00 (381)	—	15.13 (384)
2 1/2	65	16.50 (419)	—	16.63 (422)	—	—	—	17.00 (432)	—	17.13 (435)
3	80	15.00 (381)	15.00 (381)	15.13 (384)	—	—	—	18.50 (470)	—	18.63 (473)
4	100	18.00 (457)	18.00 (457)	18.13 (460)	—	—	—	22.00 (559)	—	22.13 (562)
6	150	24.00 (610)	24.00 (610)	24.13 (613)	24.00 (610)	24.00 (610)	24.13 (613)	29.00 (737)	—	29.13 (740)
8	200	29.00 (737)	29.00 (737)	29.13 (740)	29.00 (737)	29.00 (737)	29.13 (740)	32.00 (813)	—	32.13 (816)
10	250	33.00 (838)	33.00 (838)	33.13 (841)	33.00 (838)	33.00 (838)	33.13 (841)	38.00 (965)	—	38.13 (968)
12	300	—	—	—	38.00 (965)	38.00 (965)	38.13 (968)	44.00 (1118)	—	44.13 (1121)
16	400	—	—	—	44.50 (1130)	44.50 (1130)	44.88 (1140)	—	—	—

Provided by IHS
No reproduction or networking permitted without license from IHS
Licensee=ISATIS Group http://st2014.ir
Not for Resale, 10/27/2014 05:55:32 MDT

Table C.2—Plug Valves—Face-to-face (*A*) and End-to-end (*B* and *C*) Dimensions (Continued)

Dimensions in inches (millimeters)

NPS	DN	Regular Pattern			Venturi Pattern			Round Port, Full Bore		
		Raised Face *A*	Welding End *B*	Ring Joint *C*	Raised Face *A*	Welding End *B*	Ring Joint *C*	Raised Face *A*	Welding End *B*	Ring Joint *C*
		Class 1500								
2	50	14.50 (368)	—	14.63 (371)	—	—	—	15.38 (391)	—	15.50 (394)
2 1/2	65	16.50 (419)	—	16.63 (422)	—	—	—	17.88 (454)	—	18.00 (457)
3	80	18.50 (470)	18.50 (470)	18.63 (473)	—	—	—	20.63 (524)	—	20.75 (527)
4	100	21.50 (546)	21.50 (546)	21.63 (549)	—	—	—	24.63 (625)	—	24.75 (629)
6	150	27.75 (705)	27.75 (705)	28.00 (711)	27.75 (705)	27.75 (705)	28.00 (711)	31.00 (787)	—	31.25 (794)
8	200	32.75 (832)	32.75 (832)	33.13 (841)	32.75 (832)	32.75 (832)	33.13 (841)	35.00 (889)	—	35.38 (899)
10	250	39.00 (991)	39.00 (991)	39.38 (1000)	39.00 (991)	39.00 (991)	39.38 (1000)	42.00 (1067)	—	42.38 (1076)
12	300	44.50 (1130)	44.50 (1130)	45.13 (1146)	44.50 (1130)	44.50 (1130)	45.13 (1146)	48.00 (1219)	—	48.63 (1235)
		Class 2500								
2	50	17.75 (451)	—	17.88 (454)	—	—	—	—	—	—
2 1/2	65	20.00 (508)	—	20.25 (514)	—	—	—	—	—	—
3	80	22.75 (578)	—	23.00 (584)	—	—	—	—	—	—
4	100	26.50 (673)	—	26.88 (683)	—	—	—	—	—	—
6	150	36.00 (914)	—	36.50 (927)	—	—	—	—	—	—
8	200	40.25 (1022)	—	40.88 (1038)	—	—	—	—	—	—
10	250	50.00 (1270)	—	50.88 (1292)	—	—	—	—	—	—
12	300	56.00 (1422)	—	56.88 (1445)	—	—	—	—	—	—

--`,`,```,`,,,,,,``,,,`,`,`,`,`,-`-`,,`,,`,`,,`---

Provided by IHS
No reproduction or networking permitted without license from IHS

Licensee=ISATIS Group http://st2014.ir
Not for Resale, 10/27/2014 05:55:32 MDT

Table C.3—Ball Valves—Face-to-face (*A*) and End-to-end (*B* and *C*) Dimensions

Dimensions in inches (millimeters)

NPS	DN	Full Bore and Reduced Bore			Short Pattern, Full Bore, and Reduced Bore		
		Raised Face *A*	Welding End *B*	Ring Joint *C*	Raised Face *A*	Welding End *B*	Ring Joint *C*
		Class 150					
2	50	7.00 (178)	8.50 (216)	7.50 (191)	—	—	—
2 1/2	65	7.50 (191)	9.50 (241)	8.00 (203)	—	—	—
3	80	8.00 (203)	11.13 (283)	8.50 (216)	—	—	—
4	100	9.00 (229)	12.00 (305)	9.50 (241)	—	—	—
6	150	15.50 (394)	18.00 (457)	16.00 (406)	10.50 (267)	15.88 (403)	11.00 (279)
8	200	18.00 (457)	20.50 (521)	18.50 (470)	11.50 (292)	16.50 (419)	12.00 (305)
10	250	21.00 (533)	22.00 (559)	21.50 (546)	13.00 (330)	18.00 (457)	13.50 (343)
12	300	24.00 (610)	25.00 (635)	24.50 (622)	14.00 (356)	19.75 (502)	14.50 (368)
14	350	27.00 (686)	30.00 (762)	27.50 (699)	—	—	—
16	400	30.00 (762)	33.00 (838)	30.50 (775)	—	—	—
18	450	34.00 (864)	36.00 (914)	34.50 (876)	—	—	—
20	500	36 (914)	39 (991)	36.5 (927)	—	—	—
22	550	—	—	—	—	—	—
24	600	42.00 (1067)	45.00 (1143)	42.50 (1080)	—	—	—
26	650	45.00 (1143)	49.00 (1245)	—	—	—	—
28	700	49.00 (1245)	53.00 (1346)	—	—	—	—
30	750	51.00 (1295)	55.00 (1397)	—	—	—	—
32	800	54.00 (1372)	60.00 (1524)	—	—	—	—
34	850	58.00 (1473)	64.00 (1626)	—	—	—	—
36	900	60.00 (1524)	68.00 (1727)	—	—	—	—
38	950	—	—	—	—	—	—
40	1000	—	—	—	—	—	—
42	1100	—	—	—	—	—	—
48	1200	—	—	—	—	—	—
54	1400	—	—	—	—	—	—
60	1500	—	—	—	—	—	—

Provided by IHS
No reproduction or networking permitted without license from IHS
Licensee=ISATIS Group http://st2014.ir
Not for Resale, 10/27/2014 05:55:32 MDT

Table C.3—Ball Valves—Face-to-face (*A*) and End-to-end (*B* and *C*) Dimensions (Continued)

Dimensions in inches (millimeters)

NPS	DN	Full Bore and Reduced Bore			Short Pattern, Full Bore, and Reduced Bore		
		Raised Face *A*	Welding End *B*	Ring Joint *C*	Raised Face *A*	Welding End *B*	Ring Joint *C*
		Class 300					
2	50	8.50 (216)	8.50 (216)	9.13 (232)	—	—	—
2 1/2	65	9.50 (241)	9.50 (241)	10.13 (257)	—	—	—
3	80	11.13 (283)	11.13 (283)	11.75 (298)	—	—	—
4	100	12.00 (305)	12.00 (305)	12.63 (321)	—	—	—
6	150	15.88 (403)	18.00 (457)	16.50 (419)	—	—	—
8	200	19.75 (502)	20.50 (521)	20.38 (518)	16.50 (419)	16.50 (419)	17.13 (435)
10	250	22.38 (568)	22.00 (559)	23.00 (584)	18.00 (457)	18.00 (457)	18.63 (473)
12	300	25.50 (648)	25.00 (635)	26.13 (664)	19.75 (502)	19.75 (502)	20.38 (518)
14	350	30.00 (762)	30.00 (762)	30.63 (778)	—	—	—
16	400	33.00 (838)	33.00 (838)	33.63 (854)	—	—	—
18	450	36.00 (914)	36.00 (914)	36.63 (930)	—	—	—
20	500	39.00 (991)	39.00 (991)	39.75 (1010)	—	—	—
22	550	43.00 (1092)	43.00 (1092)	43.88 (1114)	—	—	—
24	600	45.00 (1143)	45.00 (1143)	45.88 (1165)	—	—	—
26	650	49.00 (1245)	49.00 (1245)	50.00 (1270)	—	—	—
28	700	53.00 (1346)	53.00 (1346)	54.00 (1372)	—	—	—
30	750	55.00 (1397)	55.00 (1397)	56.00 (1422)	—	—	—
32	800	60.00 (1524)	60.00 (1524)	61.13 (1553)	—	—	—
34	850	64.00 (1626)	64.00 (1626)	65.13 (1654)	—	—	—
36	900	68.00 (1727)	68.00 (1727)	69.13 (1756)	—	—	—
38	950	—	—	—	—	—	—
40	1000	—	—	—	—	—	—
42	1100	—	—	—	—	—	—
48	1200	—	—	—	—	—	—
54	1400	—	—	—	—	—	—
60	1500	—	—	—	—	—	—

--`,,```,,,,````-`-`,,`,,`,`,,`---

Provided by IHS
No reproduction or networking permitted without license from IHS

Licensee=ISATIS Group http://st2014.ir
Not for Resale, 10/27/2014 05:55:32 MDT

Table C.3—Ball Valves—Face-to-face (*A*) and End-to-end (*B* and *C*) Dimensions (Continued)

Dimensions in inches (millimeters)

NPS	DN	Full Bore and Reduced Bore			Full Bore and Reduced Bore		
		Raised Face *A*	Welding End *B*	Ring Joint *C*	Raised Face *A*	Welding End *B*	Ring Joint *C*
		Class 400			Class 600		
2	50	—	—	—	11.50 (292)	11.50 (292)	11.63 (295)
2 1/2	65	—	—	—	13.00 (330)	13.00 (330)	13.13 (333)
3	80	—	—	—	14.00 (356)	14.00 (356)	14.13 (359)
4	100	16.00 (406)	16.00 (406)	16.13 (410)	17.00 (432)	17.00 (432)	17.13 (435)
6	150	19.50 (495)	19.50 (495)	19.63 (498)	22.00 (559)	22.00 (559)	22.13 (562)
8	200	23.50 (597)	23.50 (597)	23.63 (600)	26.00 (660)	26.00 (660)	26.13 (664)
10	250	26.50 (673)	26.50 (673)	26.63 (676)	31.00 (787)	31.00 (787)	31.13 (791)
12	300	30.00 (762)	30.00 (762)	30.13 (765)	33.00 (838)	33.00 (838)	33.13 (841)
14	350	32.50 (826)	32.50 (826)	32.63 (829)	35.00 (889)	35.00 (889)	35.13 (892)
16	400	35.50 (902)	35.50 (902)	35.63 (905)	39.00 (991)	39.00 (991)	39.13 (994)
18	450	38.50 (978)	38.50 (978)	38.63 (981)	43.00 (1092)	43.00 (1092)	43.13 (1095)
20	500	41.50 (1054)	41.50 (1054)	41.75 (1060)	47.00 (1194)	47.00 (1194)	47.25 (1200)
22	550	45.00 (1143)	45.00 (1143)	45.38 (1153)	51.00 (1295)	51.00 (1295)	51.38 (1305)
24	600	48.50 (1232)	48.50 (1232)	48.88 (1241)	55.00 (1397)	55.00 (1397)	55.38 (1407)
26	650	51.50 (1308)	51.50 (1308)	52.00 (1321)	57.00 (1448)	57.00 (1448)	57.50 (1461)
28	700	55.00 (1397)	55.00 (1397)	55.50 (1410)	61.00 (1549)	61.00 (1549)	61.50 (1562)
30	750	60.00 (1524)	60.00 (1524)	60.50 (1537)	65.00 (1651)	65.00 (1651)	65.50 (1664)
32	800	65.00 (1651)	65.00 (1651)	65.63 (1667)	70.00 (1778)	70.00 (1778)	70.63 (1794)
34	850	70.00 (1778)	70.00 (1778)	70.63 (1794)	76.00 (1930)	76.00 (1930)	76.63 (1946)
36	900	74.00 (1880)	74.00 (1880)	74.63 (1895)	82.00 (2083)	82.00 (2083)	82.63 (2099)
38	950	—	—	—	—	—	—
40	1000	—	—	—	—	—	—
42	1100	—	—	—	—	—	—
48	1200	—	—	—	—	—	—

Provided by IHS
No reproduction or networking permitted without license from IHS
Licensee=ISATIS Group http://st2014.ir
Not for Resale, 10/27/2014 05:55:32 MDT

Table C.3—Ball Valves—Face-to-face (*A*) and End-to-end (*B* and *C*) Dimensions (Continued)

Dimensions in inches (millimeters)

NPS	DN	Full Bore and Reduced Bore			Full Bore and Reduced Bore		
		Raised Face *A*	Welding End *B*	Ring Joint *C*	Raised Face *A*	Welding End *B*	Ring Joint *C*
		Class 900			Class 1500		
2	50	14.50 (368)	14.50 (368)	14.63 (371)	14.50 (368)	14.50 (368)	14.63 (371)
2 1/2	65	16.50 (419)	16.50 (419)	16.63 (422)	16.50 (419)	16.50 (419)	16.63 (422)
3	80	15.00 (381)	15.00 (381)	15.13 (384)	18.50 (470)	18.50 (470)	18.63 (473)
4	100	18.00 (457)	18.00 (457)	18.13 (460)	21.50 (546)	21.50 (546)	21.63 (549)
6	150	24.00 (610)	24.00 (610)	24.13 (613)	27.75 (705)	27.75 (705)	28.00 (711)
8	200	29.00 (737)	29.00 (737)	29.13 (740)	32.75 (832)	32.75 (832)	33.13 (841)
10	250	33.00 (838)	33.00 (838)	33.13 (841)	39.00 (991)	39.00 (991)	39.38 (1000)
12	300	38.00 (965)	38.00 (965)	38.13 (968)	44.50 (1130)	44.50 (1130)	45.13 (1146)
14	350	40.50 (1029)	40.50 (1029)	40.88 (1038)	49.50 (1257)	49.50 (1257)	50.25 (1276)
16	400	44.50 (1130)	44.50 (1130)	44.88 (1140)	54.50 (1384)	54.50 (1384)	55.38 (1407)
18	450	48.00 (1219)	48.00 (1219)	48.50 (1232)	60.50 (1537)	—	61.38 (1559)
20	500	52.00 (1321)	52.00 (1321)	52.50 (1334)	65.50 (1664)	—	66.38 (1686)
22	550	—	—	—	—	—	—
24	600	61.00 (1549)	61.00 (1549)	61.75 (1568)	—	—	77.63 (1972)
26	650	65.00 (1651)	—	65.88 (1673)	76.50 (1943)	—	—
28	700	—	—	—	—	—	—
30	750	74.00 (1880)	—	74.88 (1902)	—	—	—
32	800	—	—	—	—	—	—
34	850	—	—	—	—	—	—
36	900	90.00 (2286)	—	91.13 (2315)	—	—	—

Provided by IHS
No reproduction or networking permitted without license from IHS
Licensee=ISATIS Group http://st2014.ir
Not for Resale, 10/27/2014 05:55:32 MDT

Table C.3—Ball Valves—Face-to-face (*A*) and End-to-end (*B* and *C*) Dimensions (Continued)

Dimensions in inches (millimeters)

NPS	DN	Full Bore and Reduced Bore		
		Raised Face *A*	Welding End *B*	Ring Joint *C*
		Class 2500		
2	50	17.75 (451)	17.75 (451)	17.88 (454)
2 1/2	65	20.00 (508)	20.00 (508)	20.25 (514)
3	80	22.75 (578)	22.75 (578)	23.00 (584)
4	100	26.50 (673)	26.50 (673)	26.88 (683)
6	150	36.00 (914)	36.00 (914)	36.50 (927)
8	200	40.25 (1022)	40.25 (1022)	40.88 (1038)
10	250	50.00 (1270)	50.00 (1270)	50.88 (1292)
12	300	56.00 (1422)	56.00 (1422)	56.88 (1445)

--`,`,```,`,,,,,,``,,,`,``,`,`,-`-`,,`,,`,`,,`---

Provided by IHS
No reproduction or networking permitted without license from IHS

Licensee=ISATIS Group http://st2014.ir
Not for Resale, 10/27/2014 05:55:32 MDT

Table C.4—Check Valves, Full-opening and Reduced Types—Face-to-face (*A*) and End-to-end (*B* and *C*) Dimensions

Dimensions in inches (millimeters)

NPS	DN	Class 150			Class 300		
		Raised Face	Welding End	Ring Joint	Raised Face	Welding End	Ring Joint
		A	*B*	*C*	*A*	*B*	*C*
2	50	8.00 (203)	8.00 (203)	8.50 (216)	10.50 (267)	10.50 (267)	11.13 (283)
2 1/2	65	8.50 (216)	8.50 (216)	9.00 (229)	11.50 (292)	11.50 (292)	12.13 (308)
3	80	9.50 (241)	9.50 (241)	10.00 (254)	12.50 (318)	12.50 (318)	13.13 (333)
4	100	11.50 (292)	11.50 (292)	12.00 (305)	14.00 (356)	14.00 (356)	14.63 (371)
6	150	14.00 (356)	14.00 (356)	14.50 (368)	17.50 (445)	17.50 (445)	18.13 (460)
8	200	19.50 (495)	19.50 (495)	20.00 (508)	21.00 (533)	21.00 (533)	21.63 (549)
10	250	24.50 (622)	24.50 (622)	25.00 (635)	24.50 (622)	24.50 (622)	25.13 (638)
12	300	27.50 (699)	27.50 (699)	28.00 (711)	28.00 (711)	28.00 (711)	28.63 (727)
14	350	31.00 (787)	31.00 (787)	31.50 (800)	33.00 (838)	33.00 (838)	33.63 (854)
16	400	34.00 (864)	34.00 (864)	34.50 (876)	34.00 (864)	34.00 (864)	34.63 (879)
18	450	38.50 (978)	38.50 (978)	39.00 (991)	38.50 (978)	38.50 (978)	39.13 (994)
20	500	38.50 (978)	38.50 (978)	39.00 (991)	40.00 (1016)	40.00 (1016)	40.75 (1035)
22	550	42.00 (1067)	42.00 (1067)	42.50 (1080)	44.00 (1118)	44.00 (1118)	44.88 (1140)
24	600	51.00 (1295)	51.00 (1295)	51.50 (1308)	53.00 (1346)	53.00 (1346)	53.88 (1368)
26	650	51.00 (1295)	51.00 (1295)	—	53.00 (1346)	53.00 (1346)	54.00 (1372)
28	700	57.00 (1448)	57.00 (1448)	—	59.00 (1499)	59.00 (1499)	60.00 (1524)
30	750	60.00 (1524)	60.00 (1524)	—	62.75 (1594)	62.75 (1594)	63.75 (1619)
36	900	77.00 (1956)	77.00 (1956)	—	82.00 (2083)	82.00 (2083)	—
38	950	—	—	—	—	—	—
40	1000	—	—	—	—	—	—
42	1100	—	—	—	—	—	—
48	1200	—	—	—	—	—	—
54	1400	—	—	—	—	—	—
60	1500	—	—	—	—	—	—

Provided by IHS
No reproduction or networking permitted without license from IHS
Licensee=ISATIS Group http://st2014.ir
Not for Resale, 10/27/2014 05:55:32 MDT

Table C.4—Check Valves, Full-opening and Reduced Types—Face-to-face (*A*) and End-to-end (*B* and *C*) Dimensions (Continued)

Dimensions in inches (millimeters)

NPS	DN	Class 400			Class 600		
		Raised Face	Welding End	Ring Joint	Raised Face	Welding End	Ring Joint
		A	*B*	*C*	*A*	*B*	*C*
2	50	11.50 (292)	11.50 (292)	11.63 (295)	11.50 (292)	11.50 (292)	11.63 (295)
2 1/2	65	13.00 (330)	13.00 (330)	13.13 (333)	13.00 (330)	13.00 (330)	13.13 (333)
3	80	14.00 (356)	14.00 (356)	14.13 (359)	14.00 (356)	14.00 (356)	14.13 (359)
4	100	16.00 (406)	16.00 (406)	16.13 (410)	17.00 (432)	17.00 (432)	17.13 (435)
6	150	19.50 (495)	19.50 (495)	19.63 (498)	22.00 (559)	22.00 (559)	22.13 (562)
8	200	23.50 (597)	23.50 (597)	23.63 (600)	26.00 (660)	26.00 (660)	26.13 (664)
10	250	26.50 (673)	26.50 (673)	26.63 (676)	31.00 (787)	31.00 (787)	31.13 (791)
12	300	30.00 (762)	30.00 (762)	30.13 (765)	33.00 (838)	33.00 (838)	33.13 (841)
14	350	35.00 (889)	35.00 (889)	35.13 (892)	35.00 (889)	35.00 (889)	35.13 (892)
16	400	35.50 (902)	35.50 (902)	35.63 (905)	39.00 (991)	39.00 (991)	39.13 (994)
18	450	40.00 (1016)	40.00 (1016)	40.13 (1019)	43.00 (1092)	43.00 (1092)	43.13 (1095)
20	500	41.50 (1054)	41.50 (1054)	41.75 (1060)	47.00 (1194)	47.00 (1194)	47.25 (1200)
22	550	45.00 (1143)	45.00 (1143)	45.38 (1153)	51.00 (1295)	51.00 (1295)	51.38 (1305)
24	600	55.00 (1397)	55.00 (1397)	55.38 (1407)	55.00 (1397)	55.00 (1397)	55.38 (1407)
26	650	55.00 (1397)	55.00 (1397)	55.50 (1410)	57.00 (1448)	57.00 (1448)	57.50 (1461)
28	700	63.00 (1600)	63.00 (1600)	63.50 (1613)	63.00 (1600)	63.00 (1600)	63.50 (1613)
30	750	65.00 (1651)	65.00 (1651)	65.50 (1664)	65.00 (1651)	65.00 (1651)	65.50 (1664)
36	900	82.00 (2083)	82.00 (2083)	—	82.00 (2083)	82.00 (2083)	—
38	950	—	—	—	—	—	—
40	1000	—	—	—	—	—	—
42	1100	—	—	—	—	—	—
48	1200	—	—	—	—	—	—
54	1400	—	—	—	—	—	—
60	1500	—	—	—	—	—	—

Provided by IHS
No reproduction or networking permitted without license from IHS
Licensee=ISATIS Group http://st2014.ir
Not for Resale, 10/27/2014 05:55:32 MDT

Table C.4—Check Valves, Full-opening and Reduced Types—Face-to-face (*A*) and End-to-end (*B* and *C*) Dimensions (Continued)

Dimensions in inches (millimeters)

NPS	DN	Class 900			Class 1500			Class 2500		
		Raised Face	Welding End	Ring Joint	Raised Face	Welding End	Ring Joint	Raised Face	Welding End	Ring Joint
		A	*B*	*C*	*A*	*B*	*C*	*A*	*B*	*C*
2	50	14.50 (368)	14.50 (368)	14.63 (371)	14.50 (368)	14.50 (368)	14.63 (371)	17.75 (451)	17.75 (451)	17.88 (454)
2 1/2	65	16.50 (419)	16.50 (419)	16.63 (422)	16.50 (419)	16.50 (419)	16.63 (422)	20.00 (508)	20.00 (508)	20.25 (514)
3	80	15.00 (381)	15.00 (381)	15.13 (384)	18.50 (470)	18.50 (470)	18.63 (473)	22.75 (578)	22.75 (578)	23.00 (584)
4	100	18.00 (457)	18.00 (457)	18.13 (460)	21.50 (546)	21.50 (546)	21.63 (549)	26.50 (673)	26.50 (673)	26.88 (683)
6	150	24.00 (610)	24.00 (610)	24.13 (613)	27.75 (705)	27.75 (705)	28.00 (711)	36.00 (914)	36.00 (914)	36.50 (927)
8	200	29.00 (737)	29.00 (737)	29.13 (740)	32.75 (832)	32.75 (832)	33.13 (841)	40.25 (1022)	40.25 (1022)	40.88 (1038)
10	250	33.00 (838)	33.00 (838)	33.13 (841)	39.00 (991)	39.00 (991)	39.38 (1000)	50.00 (1270)	50.00 (1270)	50.88 (1292)
12	300	38.00 (965)	38.00 (965)	38.13 (968)	44.50 (1130)	44.50 (1130)	45.13 (1146)	56.00 (1422)	56.00 (1422)	56.88 (1445)
14	350	40.50 (1029)	40.50 (1029)	40.88 (1038)	49.50 (1257)	49.50 (1257)	50.25 (1276)	—	—	—
16	400	44.50 (1130)	44.50 (1130)	44.88 (1140)	54.50 (1384)	54.50 (1384)	55.38 (1407)	—	—	—
18	450	48.00 (1219)	48.00 (1219)	48.50 (1232)	60.50 (1537)	60.50 (1537)	61.38 (1559)	—	—	—
20	500	52.00 (1321)	52.00 (1321)	52.50 (1334)	65.50 (1664)	65.50 (1664)	66.38 (1686)	—	—	—
24	600	61.00 (1549)	61.00 (1549)	61.75 (1568)	76.50 (1943)	76.50 (1943)	77.63 (1972)	—	—	—

--`,,`````,,,,,,`,,,,`,`,,`,`,,-`-`,,`,,`,`,,`---

Provided by IHS
No reproduction or networking permitted without license from IHS

Licensee=ISATIS Group http://st2014.ir
Not for Resale, 10/27/2014 05:55:32 MDT

Table C.5—Single- and Dual-plate, Long- and Short-pattern, Wafer-type Check Valves—Face-to-face Dimensions

Face-to-face dimensions in inches (millimeters)

NPS	DN	Class 150		Class 300		Class 400		Class 600		Class 900		Class 1500		Class 2500	
		Short Pattern	Long Pattern	Short Pattern	Long Pattern	Short Pattern	Long Pattern	Short Pattern	Long Pattern	Short Pattern	Long Pattern	Short Pattern	Long Pattern	Short Pattern	Long Pattern
2	50	0.75 (19)	2.38 (60)	0.75 (19)	2.38 (60)	0.75 (19)	2.38 (60)	0.75 (19)	2.38 (60)	0.75 (19)	2.75 (70)	0.75 (19)	2.75 (70)	—	2.75 (70)
2 1/2	65	0.75 (19)	2.63 (67)	0.75 (19)	2.63 (67)	0.75 (19)	2.63 (67)	0.75 (19)	2.63 (67)	0.75 (19)	3.25 (83)	0.75 (19)	3.25 (83)	—	3.25 (83)
3	80	0.75 (19)	2.88 (73)	0.75 (19)	2.88 (73)	0.75 (19)	2.88 (73)	0.75 (19)	2.88 (73)	0.75 (19)	3.25 (83)	0.88 (22)	3.25 (83)	—	3.38 (86)
4	100	0.75 (19)	2.88 (73)	0.75 (19)	2.88 (73)	0.88 (22)	3.13 (79)	0.88 (22)	3.13 (79)	0.88 (22)	4.00 (102)	1.25 (32)	4.00 (102)	—	4.13 (105)
6	150	0.75 (19)	3.88 (98)	0.88 (22)	3.88 (98)	1.00 (25)	5.38 (137)	1.13 (29)	5.38 (137)	1.38 (35)	6.25 (159)	1.75 (44)	6.25 (159)	—	6.25 (159)
8	200	1.13 (29)	5.00 (127)	1.13 (29)	5.00 (127)	1.25 (32)	6.50 (165)	1.50 (38)	6.50 (165)	1.75 (44)	8.13 (206)	2.25 (57)	8.13 (206)	—	8.13 (206)
10	250	1.13 (29)	5.75 (146)	1.50 (38)	5.75 (146)	2.00 (51)	8.38 (213)	2.25 (57)	8.38 (213)	2.25 (57)	9.50 (241)	2.88 (73)	9.75 (248)	—	9.88 (250)
12	300	1.50 (38)	7.13 (181)	2.00 (51)	7.13 (181)	2.25 (57)	9.00 (229)	2.38 (60)	9.00 (229)	—	11.50 (292)	—	12.00 (305)	—	12.00 (305)
14	350	1.75 (44)	7.25 (184)	2.00 (51)	8.75 (222)	2.50 (64)	10.75 (273)	2.63 (67)	10.75 (273)	—	14.00 (356)	—	14.00 (356)	—	—
16	400	2.00 (51)	7.50 (191)	2.00 (51)	9.13 (232)	2.50 (64)	12.00 (305)	2.88 (73)	12.00 (305)	—	15.13 (384)	—	15.13 (384)	—	—
18	450	2.38 (60)	8.00 (203)	3.00 (76)	10.38 (264)	3.25 (83)	14.25 (362)	3.25 (83)	14.25 (362)	—	17.75 (451)	—	18.44 (468)	—	—
20	500	2.50 (64)	8.63 (219)	3.25 (83)	11.50 (292)	3.50 (89)	14.50 (368)	3.63 (92)	14.50 (368)	—	17.75 (451)	—	21.00 (533)	—	—
24	600	—	8.75 (222)	—	12.50 (318)	—	15.50 (394)	—	17.25 (438)	—	19.50 (495)	—	22.00 (559)	—	—
30	750	—	—	—	—	—	—	—	—	—	—	—	—	—	—
36	900	—	—	—	—	—	—	—	—	—	—	—	—	—	—
42	1100	—	—	—	—	—	—	—	—	—	—	—	—	—	—
48	1200	—	—	—	—	—	—	—	—	—	—	—	—	—	—
54	1400	—	—	—	—	—	—	—	—	—	—	—	—	—	—
60	1500	—	—	—	—	—	—	—	—	—	—	—	—	—	—

Provided by IHS
No reproduction or networking permitted without license from IHS
Licensee=ISATIS Group http://st2014.ir
Not for Resale, 10/27/2014 05:55:32 MDT

Annex D
(informative)

Guidance for Travel Stops by Valve Type

This annex provides guidance on travel stops by common valve type (see Table D.1).

Table D.1—Valve Travel Stops

Valve Type	Option/Detail	Travel Stop Requirements in Valve	Manual Gearbox	Actuator
Ball	All	Stops for open and close.	Stops in gearbox for open and close.	Actuator should control position, not valve stops.
Plug—nonexpanding type	All	Stops for open and close.	Stops for open and close in gearbox.	Actuator should control position, not valve stops.
Slab/parallel Through conduit gate valve	Conventional (down to close), no backseat.	Stops for open and close.	Stops in valve for open or close. NOTE Close stops may be in yoke or on stem.	Actuator should control position, not valve stops.
Slab/parallel Through conduit gate valve	Conventional (down to close), with backseat.	Stops for open and close. NOTE Backseat provides open stop.	Stops for open and close in valve. Backseat provides open stop. NOTE Close stops may be in yoke or on stem.	Actuator torque/thrust adjusted or selected to suit backseat in open.
Slab/parallel Through conduit gate valve	Reverse acting (up to close), no backseat.	Stops for open and close.	Stops for open and close in valve. NOTE Close stops may be in yoke or on stem.	Actuator should control position, not valve stops.
Slab/parallel Through conduit gate valve	Reverse acting (up to close), with backseat.	Stops for open and close. NOTE Backseat provides closed stop.	Stops for open and close in valve. Backseat provides closed stop. NOTE Open stops may be in yoke or on stem.	Actuator should control position for open. Actuator torque/thrust adjusted or selected to suit backseat in closed position.
Expanding gate	Conventional, single expanding with backseat	No stops required. Wedging action provides close stop. Backseat provides open stop.	Stops for open in valve. Backseat provides open stop. Gearbox stop not required.	Actuator torque/thrust adjusted or selected to suit closing load in closed and backseat in open.
Expanding gate	Conventional, single expanding without backseat	No stops required in closed. Wedging action provides close stop. Stop in valve required in open.	Stops for open in valve. Gearbox stop not required.	Actuator torque/thrust adjusted or selected to suit closing load in close.
Expanding gate	Conventional, double or expanding without backseat	No stops required. Wedging action provides close and open stop.	Gearbox stop not required.	Actuator torque/thrust adjusted or selected to suit closing load in closed and wedging load in open.
Check	With external clapper lift	Stop in body required for open. No stop required for close.	Gearbox stops in open and closed position to avoid overloading valve shaft in the open position and over-rotating the shaft passed the closed position.	Actuator stops should control open position, not valve stop, to avoid overloading valve shaft.

--`,`,```,`,,,,,,``,,,`,``,`,`,`-`-`,,`,,`,`,,`---

Provided by IHS
No reproduction or networking permitted without license from IHS

Licensee=ISATIS Group http://st2014.ir
Not for Resale, 10/27/2014 05:55:32 MDT

Annex E
(informative)

API 20 Series Supply Chain Management

E.1 General

This annex provides guidance on supply chain management to cover castings, forgings, and bolting.

NOTE The standards referenced in this annex may become mandatory (normative) in future edition(s) of this standard.

E.2 Castings

Castings may be specified by the purchaser per API 20A for castings per specification levels CSL-1, CSL-2, CSL-3, or CSL-4.

E.3 Open-die Forgings

Open-die forgings may be specified by the purchaser per API 20B per specification levels FSL-1, FSL-2, FSL-3, or FSL-4.

E.4 Closed-die Forgings

Closed-die forgings may be specified by the purchaser per API 20C per specification levels FSL-1, FSL-2, FSL-3, or FSL-4.

E.5 Carbon and Alloy Steel Bolting

Carbon and alloy steel bolting may be specified by the purchaser per API 20E for bolting per specification levels BSL-1, BSL-2, or BSL-3.

Provided by IHS
No reproduction or networking permitted without license from IHS
Licensee=ISATIS Group http://st2014.ir
Not for Resale, 10/27/2014 05:55:32 MDT

Annex F
(normative)

Qualification of Heat-treating Equipment

F.1 General

All heat treatment of parts and TCs shall be performed with equipment meeting the requirements of this annex.

F.2 Temperature Tolerance

The temperature at any point in the working zone shall not vary by more than ±25 °F (±13 °C) from the furnace set-point temperature after the furnace working zone has been brought up to temperature. Furnaces that are used for tempering, aging, and/or stress relieving shall not vary by more than ±15 °F (±8 °C) from the furnace set-point temperature after the furnace working zone has been brought up to temperature.

F.3 Furnace Calibration

F.3.1 General

The following provided details on the types of furnaces to be surveyed.

F.3.2 Temperature Survey Method for Calibration of Batch-type Furnaces

A temperature survey within the furnace working zone(s) shall be performed on each furnace at the maximum and minimum temperatures for which each furnace is to be used.

A minimum of nine thermocouple test locations shall be used for all furnaces having a working zone greater than 10 ft^3 (0.3 m^3).

For each 125 ft^3 (3.5 m^3) of furnace working zone surveyed, at least one thermocouple test location shall be used, up to a maximum of 40 thermocouples. See Figure F.1 and Figure F.2 for examples of thermocouple locations.

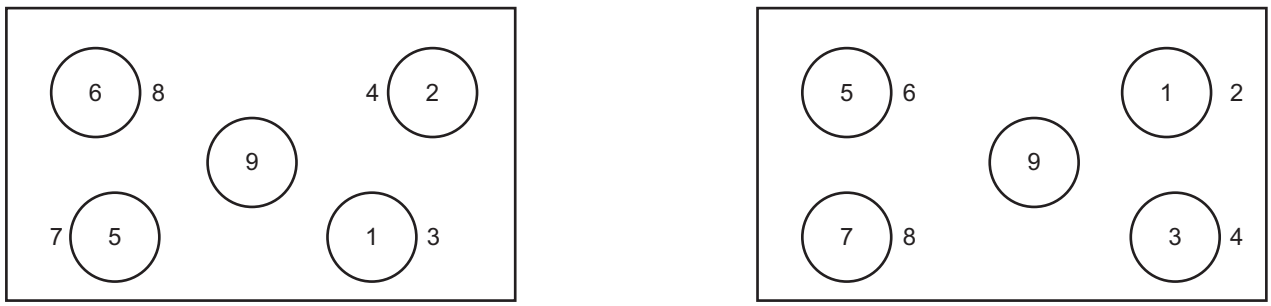

a) Top view

b) Side view

Figure F.1—Thermocouple Location—Rectangular Furnace (Working Zone)

--`,,`,,`-`-`,,`,,`,`,,`---

Provided by IHS
No reproduction or networking permitted without license from IHS

Licensee=ISATIS Group http://st2014.ir
Not for Resale, 10/27/2014 05:55:32 MDT

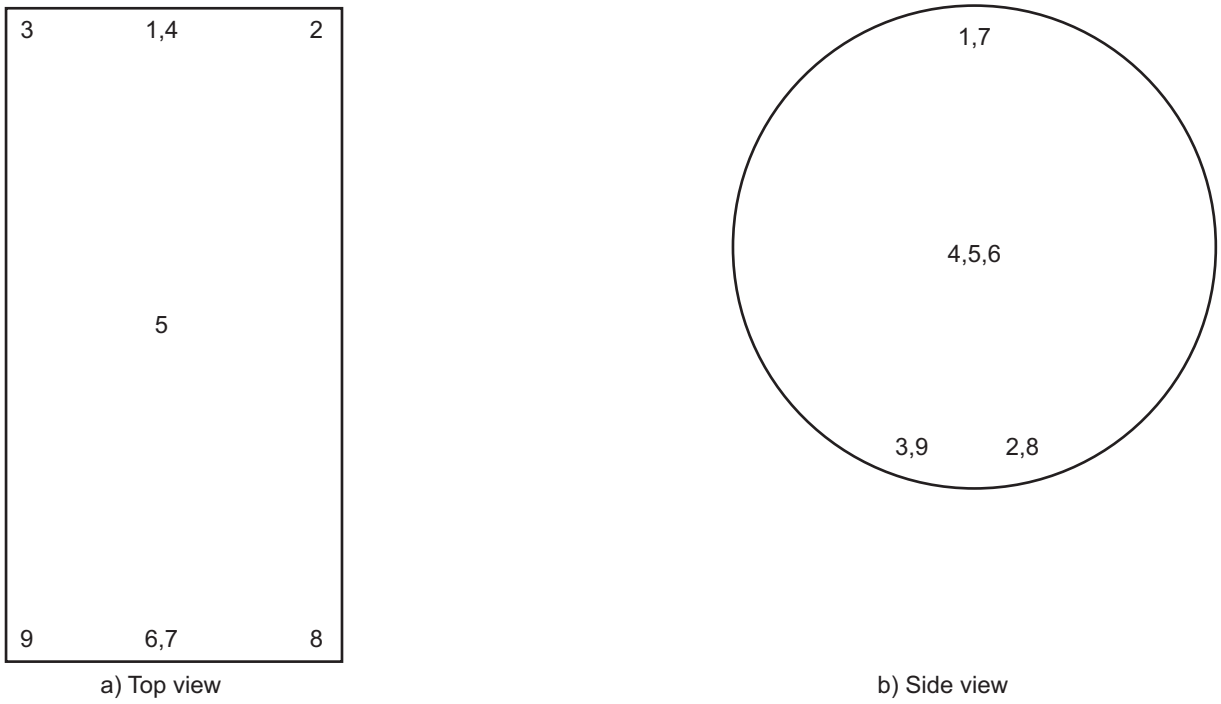

a) Top view

b) Side view

Figure F.2—Thermocouple Locations—Cylindrical Furnace (Working Zone)

For furnaces having a working zone less than 10 ft^3 (0.3 m^3), the temperature survey may be made with a minimum of three thermocouples located either at the front, center, and rear or at the top, center, and bottom of the furnace working zone.

After insertion of the temperature-sensing devices, readings shall be taken at least once every 3 min to determine when the temperature of the furnace working zone approaches the bottom of the temperature range being surveyed.

Once the furnace temperature has reached the set-point temperature, the temperature of all test locations shall be recorded at 2-min intervals, maximum, for at least 10 min. Then readings shall be taken at 5-min intervals, maximum, for sufficient time (at least 30 min) to determine the recurrent temperature pattern of the furnace working zone.

Before the furnace set-point temperature is reached, none of the temperature readings shall exceed the set-point temperature by more than ±25 °F (±13 °C).

After the furnace control set-point temperature is reached, no temperature reading shall vary beyond the limits specified. The temperatures within each furnace shall be surveyed within one year prior to use of the furnace for heat treatment.

F.3.3 Temperature Survey Method for Recalibration of Batch-type Furnaces

When a furnace is repaired or rebuilt, a new temperature survey shall be carried out before the furnace is used for heat treatment, subject to the following.

Repairs that return the furnace to the condition it was in at the time of the last furnace survey and calibration or repairs that do not affect the temperature tolerance of the furnace shall not require a new temperature survey and calibration.

Provided by IHS
No reproduction or networking permitted without license from IHS
Licensee=ISATIS Group http://st2014.ir
Not for Resale, 10/27/2014 05:55:32 MDT

The SAE AMS 2750 sections on furnace modifications and furnace repairs shall be used to determine whether a new furnace survey is required. All furnace repairs and modifications shall be documented and the responsible Quality Assurance organization shall make determination whether an additional furnace survey and calibration is required based on the repairs or modifications in accordance with AMS 2750.

F.3.4 Continuous-type Furnaces Method

Furnaces used for continuous heat treatment shall be calibrated in accordance with procedures specified in SAE AMS-H-6875.

F.4 Instruments

F.4.1 General

Automatic controlling and recording instruments shall be used.

Thermocouples shall be located in the furnace working zone(s) and protected from furnace atmospheres by means of suitable protective devices.

F.4.2 Accuracy

The controlling and recording instruments used for the heat-treatment processes shall be accurate to ±1 % of their full-scale range.

F.4.3 Calibration

Temperature-controlling and temperature-recording instruments shall be calibrated at least once every three months.

Equipment used to calibrate the production equipment shall be accurate to ±0.25 % of full-scale range.

Provided by IHS
No reproduction or networking permitted without license from IHS
Licensee=ISATIS Group http://st2014.ir
Not for Resale, 10/27/2014 05:55:32 MDT

Annex G
(normative)

Requirements for Nondestructive Examination

G.1 General

This annex specifies the requirements for NDE that shall be performed by the manufacturer if specified by the purchaser.

G.2 Radiographic Testing (RT) on 100 % of Critical Areas of Castings

Examination shall be carried out in accordance with ASME B16.34, Appendix I.

Acceptance shall be in accordance with ASME B16.34, Appendix I.

G.3 RT on 100 % of Accessible Areas of Castings

Examination shall be carried out in accordance with ASME B16.34, Appendix I.

Acceptance shall be in accordance with ASME B16.34, Appendix I.

G.4 Ultrasonic Testing (UT) on 100 % of Critical Areas of Castings

Examination shall be carried out in accordance with ASME B16.34, Appendix IV.

Acceptance shall be in accordance with ASME B16.34, Appendix IV.

G.5 UT on 100 % of Accessible Areas of Castings

Examination shall be carried out in accordance with ASME B16.34, Appendix IV.

Acceptance shall be in accordance with ASME B16.34, Appendix IV.

G.6 Magnetic-particle Testing (MT) on 100 % of Castings on External and Internal Surface per ASME *BPVC*, Sections V and VIII

Examination shall be carried out in accordance with ASME *BPVC*, Section V, Article 7.

Acceptance shall be in accordance with ASME *BPVC*, Section VIII, Division 1, Appendix 7.

G.7 MT on 100 % of Castings on External and Internal Surface

Area per ASME B16.34 Modified.

Examination shall be carried out in accordance with ASME B16.34, Appendix II.

Acceptance shall be in accordance with ASME B16.34, Appendix II, except round or linear indication shall not exceed 5 mm (0.197 in.).

Provided by IHS
No reproduction or networking permitted without license from IHS
Licensee=ISATIS Group http://st2014.ir
Not for Resale, 10/27/2014 05:55:32 MDT

G.8 Penetrant Testing (PT) on 100 % of Castings on External and Internal Surface Area per ASME *BPVC*, Sections V and VIII

Examination shall be carried out in accordance with ASME *BPVC*, Section V, Article 6.

Acceptance shall be in accordance with ASME *BPVC*, Section VIII, Division 1, Appendix 7.

G.9 PT on 100 % of Castings on External and Internal Surface Area per ASME B16.34 Modified

Examination shall be carried out in accordance with ASME B16.34, Appendix III.

Acceptance shall be in accordance with ASME B16.34, Appendix III, except round or linear indication shall not exceed 5 mm (0.197 in.).

G.10 UT of Forgings and Plate on 100 % of Surface Area

Examination shall be carried out in accordance with ASME B16.34, Appendix IV.

Acceptance shall be in accordance with ASME B16.34, Appendix IV.

G.11 MT of Forgings on 100 % of Surface Area

Examination shall be carried out in accordance with ASME *BPVC*, Section V, Article 7.

Acceptance shall be in accordance with ASME *BPVC*, Section VIII, Division 1, Appendix 6.

G.12 PT of Forgings on 100 % of Surface Area

Examination shall be carried out in accordance with ASME *BPVC, Section* V, Article 6.

Acceptance shall be in accordance with ASME *BPVC*, Section VIII, Division 1, Appendix 8.

G.13 RT of Weldments on 100 % of Weld

Examination shall be carried out in accordance with ASME *BPVC*, Section V, Article 2.

Acceptance shall be in accordance with ASME *BPVC*, Section VIII, Division 1, UW-51 for linear indications and ASME *BPVC*, Section VIII, Division 1, Appendix 4 for rounded indications.

G.14 UT of Full-penetration Welds on 100 % of Weld

Examination shall be carried out in accordance with ASME *BPVC*, Section V, Article 4.

Acceptance shall be in accordance with ASME *BPVC*, Section VIII, Division 1, Appendix 12.

G.15 MT of Welds on 100 % of Weld Surface Area

Examination shall be carried out in accordance with ASME *BPVC*, Section V, Article 7.

Acceptance shall be in accordance with ASME *BPVC*, Section VIII, Division 1, Appendix 6.

Provided by IHS
No reproduction or networking permitted without license from IHS
Licensee=ISATIS Group http://st2014.ir
Not for Resale, 10/27/2014 05:55:32 MDT

G.16 PT of Welds on 100 % of Weld Surface Area

Examination shall be carried out in accordance with ASME *BPVC*, Section V, Article 6.

Acceptance shall be in accordance with ASME *BPVC*, Section VIII, Division 1, Appendix 8.

G.17 UT of Weld Overlay on 100 % of Surface

Examination shall be carried out in accordance with ASME *BPVC*, Section V, Article 4 straight beam method.

Acceptance criteria shall be in accordance with ASTM A578A/A578M standard Level C.

G.18 MT on 100 % of Bolting Surface Area

Examination shall be carried out in accordance with ASME *BPVC*, Section V, Article 7.

Acceptance shall be in accordance with ASME *BPVC*, Section VIII, Division 1, Appendix 6.

G.19 PT on 100 % of Bolting Surface Area

Examination shall be carried out in accordance with ASME *BPVC*, Section V, Article 6.

Acceptance shall be in accordance with ASME *BPVC*, Section VIII, Division 1, Appendix 8.

G.20 MT on 100 % of Machined Surfaces

Examination shall be carried out in accordance with ASME *BPVC*, Section V, Article 7.

Acceptance shall be in accordance with ASME *BPVC*, Section VIII, Division 1, Appendix 6.

G.21 PT on 100 % of Machined Surfaces

Examination shall be carried out in accordance with ASME *BPVC*, Section V, Article 6.

Acceptance shall be in accordance with ASME *BPVC*, Section VIII, Division 1, Appendix 8.

G.22 MT on 100 % of Sealing (Including Seating) Surfaces

Examination shall be carried out in accordance with ASME *BPVC*, Section V, Article 7.

Acceptance criteria for machined sealing surfaces shall be in accordance with ASME *BPVC*, Section VIII, Division 1, Appendix 6.

In addition to the stated acceptance criteria, no rounded or linear indications in pressure-contact sealing surfaces are allowed.

G.23 PT on 100 % of Sealing (Including Seating) Surfaces

Examination shall be carried out in accordance with ASME *BPVC*, Section V, Article 6.

Acceptance criteria for machined sealing surfaces shall be in accordance with ASME *BPVC*, Section VIII, Division 1, Appendix 8.

In addition to the stated acceptance criteria, no rounded or linear indications in pressure-contact sealing surfaces are allowed.

Provided by IHS
No reproduction or networking permitted without license from IHS
Licensee=ISATIS Group http://st2014.ir
Not for Resale, 10/27/2014 05:55:32 MDT

G.24 PT on 100 % of Weld Bevels of Welding Ends After Machining

Examination shall be carried out in accordance with ASME *BPVC*, Section V, Article 6.

Acceptance shall be in accordance with ASME *BPVC*, Section VIII, Division 1, Appendix 8.

G.25 PT on 100 % of Weld Overlay Area

Examination shall be carried out in accordance with ASME *BPVC*, Section V, Article 6.

Acceptance criteria for nonmachined overlay shall be in accordance with ASME *BPVC*, Section VIII, Division 1, Appendix 8, except that relevant indications (rounded and linear) of less than 5 mm are acceptable.

Acceptance criteria for machined overlay shall be in accordance with ASME *BPVC*, Section VIII, Division 1, Appendix 8, except that there shall be no indications in the seal areas.

G.26 MT on 100 % of Weld Bevels of Welding Ends After Machining

Examination shall be carried out in accordance with ASME *BPVC*, Section V, Article 7.

Acceptance shall be in accordance with ASME *BPVC*, Section VIII, Division 1, Appendix 6.

G.27 NDE Volumetric and Surface on 100% of Welding Ends After Machining

Volumetric NDE examination of welding ends (see G.2, G.4, or G.10) shall be performed for a minimum length equal to 1.5 times the mating pipe wall thickness or 50 mm, whichever is greater.

Surface NDE shall be performed on the machined ends of the valve-weld bevel per G.24 or G.26.

Provided by IHS
No reproduction or networking permitted without license from IHS
Licensee=ISATIS Group http://st2014.ir
Not for Resale, 10/27/2014 05:55:32 MDT

Annex H
(normative)

Supplementary Test Requirements

H.1 General

This annex specifies requirements for supplementary testing, which shall be performed by the manufacturer if specified by the purchaser. The frequency of testing shall also be specified by the purchaser, if not defined in this annex.

H.2 Hydrostatic Testing

By agreement, hydrostatic testing may be performed at pressures higher than specified in 9.3 and 9.4 and/or for periods longer than specified in Table 4, Table 5, and Table 6.

H.3 Low-pressure Gas Seat Testing

H.3.1 General

The valve shall be drained of hydrostatic test fluid prior to the start of the low-pressure gas seat test.

H.3.2 Type I

The seat test specified in 9.4 shall be repeated at a test pressure between 5 psi and 14.5 psi (0.34 barg and 1 bar) using air or nitrogen as the test medium.

H.3.3 Type II

The seat test specified in 9.4 shall be repeated at a test pressure between 80 psi and 100 psi (5.5 bar and 6.9 bar) using air or nitrogen as the test medium.

H.3.4 Acceptance

The acceptable leakage rate for low-pressure gas seat testing shall be:

- ISO 5208, Rate A (no visible leakage), for soft-seated valves and lubricated-plug valves;
- ISO 5208, Rate D, for metal-seated valves.

H.4 High-pressure Gas Testing

H.4.1 General

Warning—High-pressure gas testing involves potential hazards. Appropriate safety precautions should be taken.

H.4.2 High-pressure Gas Shell Testing

H.4.2.1 General

Valves shall have a high-pressure gas shell test performed using inert gas as the test medium. Test shall be performed using 99 % nitrogen with a 1 % helium tracer measured using a mass spectrometer. The minimum test

Provided by IHS
No reproduction or networking permitted without license from IHS
Licensee=ISATIS Group http://st2014.ir
Not for Resale, 10/27/2014 05:55:32 MDT

pressure shall be 1.1 times the pressure rating determined in accordance with 5.2 for the material at 100 °F (38 °C). The test duration shall be in accordance with Table H.1.

As an alternate the valve may be submerged in water during this test using nitrogen as the test medium.

H.4.2.2 Acceptance Criteria

Acceptance criteria shall be as follows.

— A maximum of 0.27 ml/min of (nitrogen + helium) from any leak path.

— When the valve is tested by submerged method, no visible leakage is allowed.

H.4.3 High-pressure Gas Seat Testing

H.4.3.1 General

Valves shall have a high-pressure gas seat test performed using inert gas as the test medium. The minimum test pressure shall be 1.1 times the pressure rating determined in accordance with 5.2 for the material at 100 °F (38 °C). The test duration shall be in accordance with Table H.1.

Table H.1—Minimum Duration of Pneumatic Shell and Seat Tests

Valve Size		Test Duration min
NPS	DN	
≤18	≤450	15
20 and larger	500 and larger	30

H.4.3.2 Acceptance Criteria

Leakage for soft-seated valves and lubricated plug valves shall not exceed ISO 5208, Rate A (no visible leakage). For metal-seated valves, except check valves, the leakage rate shall not be more than two times ISO 5208, Rate D, unless otherwise agreed.

For metal-seated check valves, the leakage rate shall not exceed ISO 5208, Rate EE.

H.5 Antistatic Testing

The electrical resistance between the obturator and the valve body and between the stem/shaft and the valve body shall be measured using a direct-current power source not exceeding 12 V. The resistance shall be measured on dry valves before pressure testing and shall not exceed 10 Ω.

H.6 Torque/Thrust Functional Testing

The maximum torque or thrust required to operate ball, gate or plug valves shall be measured at the pressure specified by the purchaser for the following valve operations:

a) open to closed with the bore pressurized and the cavity at atmospheric pressure, if applicable to the valve design;

b) closed to open with both sides of the obturator pressurized and the cavity at atmospheric pressure;

c) closed to open with one side of the obturator pressurized and the cavity at atmospheric pressure;

Provided by IHS
No reproduction or networking permitted without license from IHS
Licensee=ISATIS Group http://st2014.ir
Not for Resale, 10/27/2014 05:55:32 MDT

d) as in Item c) but with the other side of the obturator pressurized.

Torque or thrust values shall be measured with seats free of sealant except where the sealant is the primary means of sealing. If necessary for assembly, a lubricant with a viscosity not exceeding that of SAE 10W motor oil or equivalent may be used.

Thrust and torque testing shall be performed following high-pressure hydrostatic seat testing and, if specified, prior to any low-pressure gas seat testing.

The measured torque or thrust results shall be recorded and shall not exceed the manufacturer's documented breakaway torque/thrust.

H.7 Drive Train Strength Test

H.7.1 General

The drive train strength test for ball, gate or plug valves shall be measured when specified by the purchaser. The test torque shall be the greater of:

a) twice the manufacturer's predicted breakaway torque/thrust; or

b) twice the measured breakaway torque/thrust.

The test torque shall be applied with obturator blocked for a minimum time of 1 min.

NOTE For gate valves, the thrust can be tensile or compressive, whichever is the most stringent condition.

H.7.2 Acceptance Criteria

The test shall not cause any permanent visible deformation of the drive train.

For ball and plug valves, the total torsional deflection of the extended drive train when delivering the design torque shall not exceed the overlap contact angle between the seat and obturator.

H.8 Cavity Relief Testing

H.8.1 Frequency

Each valve shall be tested.

Cavity relief testing is not required if protection of the cavity against over-pressure is ensured, for both the open and the closed position, by a hole in the obturator or around the seat seal.

H.8.2 Trunnion-mounted Ball Valves and Through-conduit Gate Valves with Internal-relieving Seats

The procedure for cavity-relief testing of trunnion-mounted ball valves and through-conduit gate valves with internal-relieving seats shall be as follows.

a) Fill the valve in the half-open position with water.

b) Close the valve and allow water to overflow from the test connection at each end of the valve.

c) Apply pressure to the valve cavity until one seat relieves the cavity pressure into the valve end; record this relief pressure.

Provided by IHS
No reproduction or networking permitted without license from IHS
Licensee=ISATIS Group http://st2014.ir
Not for Resale, 10/27/2014 05:55:32 MDT

d) For valve types with second-seat relief, continue to increase the pressure to the cavity until the second seat relieves; record the relief pressure of the second seat.

Failure to relieve at a pressure less than the valve cavity relief pressure per 5.8 shall be cause for rejection.

H.9 Double Block and Bleed (DBB) Valves

H.9.1 General

With the valve unseated and partially open, the valve and its cavity shall be completely filled with test fluid. The valve shall then be closed and the valve body vent valve opened to allow excess test fluid to overflow from the valve-cavity test connection. The test pressure shall be applied simultaneously from both valve ends.

Seat tightness shall be monitored via overflow through the valve cavity connection.

H.9.2 Acceptance

Acceptance criteria shall be per the requirements of 9.4.3, except the metal-to-metal seat test leakage rate shall not be more than two times ISO 5208, Rate D.

H.10 Double Isolation and Bleed DIB-1 (Both Seats Bidirectional)

H.10.1 General

Each seat shall be tested in both directions.

Cavity-relief valves shall be removed if fitted. The valve and cavity shall be filled with test fluid, with the valve unseated and partially open, until the test fluid overflows through the cavity relief connection.

To test for seat leakage in the direction of the cavity, the valve shall be closed. The test pressure shall be applied successively to each valve end to test each seat separately from the upstream side. Leakage shall be monitored via the valve cavity pressure relief connection.

Thereafter, each seat shall be tested as a downstream seat. Both ends of the valve shall have the ends open to atmosphere and the valve cavity filled with test fluid. Pressure shall then be applied whilst monitoring leakage through each seat at both ends of the valve.

Some valve types can require the balancing of the upstream and valve cavity pressure during the downstream seat test in which case only one end of the valve shall be open to atmosphere.

H.10.2 Acceptance

Acceptance criteria shall be per the requirements of 9.4.3, except the metal-to-metal seat test leakage rate shall not be more than two times ISO 5208, Rate D.

H.11 Double Isolation and Bleed DIB-2 (One Seat Unidirectional and One Seat Bidirectional)

H.11.1 General

The bidirectional seat shall be tested in both directions.

Cavity-relief valves shall be removed if fitted. The valve and cavity shall be filled with test fluid, with the valve unseated and partially half-open, until the test fluid overflows through the cavity relief connection.

Provided by IHS
No reproduction or networking permitted without license from IHS
Licensee=ISATIS Group http://st2014.ir
Not for Resale, 10/27/2014 05:55:32 MDT

To test for seat leakage in the direction of the cavity, the valve shall be closed. The test pressure shall be applied successively to each valve end to test each seat separately from the upstream side. Leakage shall be monitored via the valve cavity pressure relief connection.

To test the bidirectional seat from the cavity test, pressure shall be applied simultaneously to the valve cavity and upstream end. Monitor leakage at the downstream end of the valve.

H.11.2 Acceptance

Acceptance criteria shall be per the requirements of 9.4.3, except the metal-to-metal seat test leakage rate shall not be more than two times ISO 5208, Rate D.

H.12 Test Sequence for Valves Required for Double Isolation and Bleed (DIB) Operations

H.12.1 General

The following steps shall be performed on each end or each side of the valve.

— Step 1: With valve partly open, fill valve with test medium and pressurize to valve design pressure.

— Step 2: Close valve.

— Step 3: Reduce pressure on downstream side of valve to zero and monitor cavity pressure.

— Step 4: Monitor leakage between cavity and downstream side.

— Step 5: Reduce pressure in cavity slowly, and monitor upstream pressure, and leakage to the downstream side.

— Step 6: Reintroduce pressure into the cavity slowly up to 145 psi (10 bar) and monitor leakage to the downstream side.

— Step 7: Reduce pressure in cavity slowly and monitor leakage to the downstream side.

— Step 8: With cavity and downstream vented to zero, measure upstream seat performance by monitoring leakage at the cavity port.

— Step 9: If applicable to the valve type, repeat Steps 1 through 8 on the opposite side of the valve.

H.12.2 Test Medium

Test fluid shall be fresh water in accordance with 9.1 or nitrogen gas, as specified.

H.12.3 Acceptance

Leakage for soft-seated valves shall not exceed ISO 5208, Rate A (no visible detectable leakage for the duration of the test at test pressure).

For metal-seated valves the leakage rate shall not exceed ISO 5208, Rate C; however, for valves in gas service the leakage rate shall not exceed ISO 5208, Rate D.

--`,`,```,`,,,,,,``,,,`,``,`,`,`,-`-`,,`,,`,`,,`---

Provided by IHS
No reproduction or networking permitted without license from IHS

Licensee=ISATIS Group http://st2014.ir
Not for Resale, 10/27/2014 05:55:32 MDT

Annex I
(informative)

Requirements for Extended Hydrostatic Shell Test Duration and Records Retention for Valves in Jurisdictional Pipeline Systems

I.1 General

This annex provides a recommended practice pertaining to valves used in jurisdictional pipeline systems. Valves used in transportation of natural and other gas and hazardous liquids or carbon dioxide by pipeline are usually regulated by the national governments of the countries in which the pipeline is located. This annex specifies the requirements for extended hydrostatic shell testing that shall be performed by the manufacturer if specified by the purchaser. This annex also specifies the test records to be provided to the purchaser and record retention requirements.

I.2 Hydrostatic Shell Testing Requirements

I.2.1 General

The hydrostatic shell test shall be in accordance with 9.1 and 9.3 of this specification with test duration of at least four (4) hours.

I.2.2 Test Record Requirements

Test records shall contain the following as a minimum and be provided to the purchaser.

a) The name of the manufacturer, name of the organization that performs testing (if other than the valve manufacturer), the identification of the individual responsible for performing the test, date, time, and location of test.

b) Serial number, size, class, and end connection.

c) Test medium (fluid) used.

d) The beginning, ending, and actual test pressure and temperature readings, unless otherwise agreed.

e) The test duration.

f) A chart recording or digital record of the pressure showing the raise from zero to pressure at the beginning of the test and return to zero at the end.

g) Any significant variations in pressure or temperature for the particular test.

h) Any leaks or failures and their disposition.

i) Certificates of calibration for all instrumentations used in the test, such as pressure transducers, pressure gauges, temperature devices, and chart recorders.

I.2.3 Minimum Requirements for Pressure Transducers, Pressure Gauges, Temperature Devices, and Chart Recorders

Pressure transducers, pressure gauges, temperature devices, and chart recorders shall be calibrated in accordance with Section 8 of this specification but at an interval not greater than 12 months.

Provided by IHS
No reproduction or networking permitted without license from IHS
Licensee=ISATIS Group http://st2014.ir
Not for Resale, 10/27/2014 05:55:32 MDT

I.2.4 Record Retention Requirement

Test records in I.2.2 shall be shall be provided to the purchaser and maintained by the manufacturer in accordance with Section 13 of this specification.

--`,,```,,,,````-`-`,,`,,`,`,,-`-`,,`,,`,`,,`---

Provided by IHS
No reproduction or networking permitted without license from IHS

Licensee=ISATIS Group http://st2014.ir
Not for Resale, 10/27/2014 05:55:32 MDT

Annex J
(normative)

Quality Specification Level (QSL) for Pipeline Valves

J.1 General

This annex specifies quality levels for pipeline valves. QSL-1 is the quality level as specified in API 6D. QSL-2 to QSL-4, which are quality levels, are optional and may be specified by the purchaser. The QSLs increase in stringency of requirements with the QSL number. The QSLs include specific requirements for NDE, pressure testing, and documentation of the manufacturing process. When any of the QSLs are specified by the purchaser, all the requirements of a specific QSL shall be provided.

J.2 Specification of Quality Levels for NDE

Table J.1 specifies the additional NDE requirements by inspection code for QSL-3 and QSL-4. These requirements vary by the type of raw material for the item being inspected. There are no additional NDE requirements for QSL-1 and QSL-2. Table J.2 specifies the extent, method, and acceptance criteria for the various inspection codes used in Table J.1.

Table J.1—NDE Requirements

Part	QSL-3			QSL-4		
	Cast	Forged	Plate	Cast	Forged	Plate
Body or closures and end connections or bonnet or cover or gland housing	VT1 and RT1 [a]	VT2 and UT2	VT2 and UT2	VT1 and RT1 [a f] and UT1 and MT1 or PT1	VT2 and UT2 and MT1 or PT1	VT2 and UT2 and MT1 or PT1
Welding ends [b]	VT1 and RT3 or UT4 MT1 or PT1	VT2 and UT2 and MT1 or PT1	VT2 and UT2 and MT1 or PT1	VT1 and RT3 or UT4 MT1 or PT1	VT2 and UT2 and MT1 or PT1	VT2 and UT2 and MT1 or PT1
Stem or shaft [c g]	N/A	VT2 MT1 or PT1	N/A	N/A	VT2 UT2 MT1 or PT1	N/A
Trunnion [d g] or Trunnion/bearing plates	VT1	VT2	VT2	VT1 and UT1 and MT1 or PT1	VT2 and UT2 and MT1 or PT1	VT2 and UT2 and MT1 or PT1
Bolting—pressure containing	N/A	VT2	N/A	N/A	VT2 MT1 or PT1	N/A
Ball or gate [c]	VT1	VT2	VT2	VT1 and MT1 or PT1	VT2 and MT1 or PT1	VT2 and MT1 or PT1
Plug or clapper disc [c g]	VT1	VT2	VT2	VT1 and RT3 or UT4 MT1 or PT1	VT2 and MT1 or PT1	VT2 and MT1 or PT1
Clapper disc arm	VT1	VT2	VT2	VT1 and RT3 or UT4 MT1 or PT1	VT2 and UT2 and MT1 or PT1	VT2 and UT2 and MT1 or PT1
Seat rings [c g]	VT1	VT2	VT2	VT1 MT1 or PT1	VT2 MT1 or PT1	VT2 MT1 or PT1
Corrosion-resistant overlay	VT3 and PT1			VT3 and UT3 and PT1		
Seals gaskets	VT4					

Provided by IHS
No reproduction or networking permitted without license from IHS
Licensee=ISATIS Group http://st2014.ir
Not for Resale, 10/27/2014 05:55:32 MDT

Table J.1—NDE Requirements (Continued)

Part	QSL-3			QSL-4		
	Cast	Forged	Plate	Cast	Forged	Plate
Seat springs	VT4					
Pressure-containing welds	VT3 and RT2 and MT1 or PT1 or VT3 and UT3 and MT1 or PT1					
Reinforcement and stiffening welds	VT3					
Fillet and attachment welds to pressure-containing parts	VT3 and MT1 or PT1					
Pipe pup to valve welds or pipe pups [e]	VT3 and RT2 and MT1 or PT1					
Plating	VT4					
Hard facing	VT4 and PT1					
Sealing surfaces	MT2 or PT2					

NOTE 1 See Table J.2 for specification of the examinations referred to in this table.

NOTE 2 N/A means that the manufacturer is not allowed to use this material form for that specific part.

NOTE 3 All the NDE activities listed above for a specific product form or forms shall be conducted.

[a] RT1 may be replaced by UT4 by agreement.

[b] NDE back 50 mm from weld end.

[c] MT or PT to be performed prior to coating, plating, or overlay.

[d] Trunnion may be pressure containing or pressure controlling, depending on design type. If the trunnion is a pressure-containing part, then the requirements for body apply.

[e] NDE requirements of pipe pups shall be established by agreement.

[f] RT1 plus UT1 may be replaced by RT3.

[g] Requirements for examination of bar material shall be as for forgings.

J.3 Hydrostatic/Pneumatic Testing

Table J.3 defines the additional test requirements for QSL-2, QSL-3, and QSL-4. All QSL-4 pressure tests shall be recorded on time-based equipment. There are no additional testing requirements for QSL-1.The high-pressure shell and seat test pneumatic test listed in QSL-3 and QSL-4 are only required when the valve is for gas service. QSL-4 requires that the high-pressure shell and seat pneumatic testing shall be submerged in water.

J.4 Documentation

Table J.4 specifies the final assembly documentation requirements for QSL-1, QSL-2, QSL-3, and QSL-4. There are no additional documentation requirements for QSL-1.

Provided by IHS
No reproduction or networking permitted without license from IHS
Licensee=ISATIS Group http://st2014.ir
Not for Resale, 10/27/2014 05:55:32 MDT

Table J.2—Extent, Method, and Acceptance Criteria of NDE/Item Examination Code

Examination	NDE	Extent	Method	Acceptance
RT1	RT casting	Critical areas per ASME B16.34 or as defined by manufacture	ASME *BPVC*, Section V, Article 2	ASME *BPVC*, Section VIII, Div. 1, Appendix 7
RT2	RT weldments	100 % where practicable	G.13	G.13
RT3	RT casting	100 %	ASME *BPVC*, Section V, Article 2	ASME *BPVC*, Section VIII, Div. 1, Appendix 7
UT1	UT casting	Remaining areas not covered by RT1	ASME *BPVC*, Section V, Article 5	ASTM A609/A609M, Table 2, Quality Level 2
UT2	UT forging and plate	All surfaces	ASME *BPVC*, Section V, Article 5	Forgings: ASME *BPVC*, Section VIII, Div. 1, UF-55 for angle beam and ASME B16.34 for straight beam Plate: ASTM A578/A578M Acceptance standard level B
UT3	UT weldments	G.14	G.14	G.14
	UT overlay	G.17	G.17	G.17
UT4	Casting	100 %	ASME *BPVC*, Section V, Article 5	ASTM A609/A609M, Table 2, Quality Level 1
MT1	MT	G.6, G.7, G.11, G.15, G.18, G.20, or G.26	G.6, G.7, G.11, G.15, G.18, G.20, or G.26	G.6, G.7, G.11, G.15, G.18, G.20, or G.26
MT2	MT	G.22	G.22	G.22
PT1	PT	G.8, G.9, G.12, G.16, G.19, G.21, G.24, or G.25	G.8, G.9, G.12, G.16, G.19, G.21, G.24, or G.25	G.8, G.9, G.12, G.16, G.19, G.21, G.24, or G.25
PT2	PT	G.23	G.23	G.23
VT1	VT castings	100 % accessible surfaces	Section 8.6	Section 8.6
VT2	VT forging and plate	100 % accessible surfaces	ASME *BPVC*, Section VIII, Div. 1, UF-45 and UF-46	ASME *BPVC*, Section VIII, Div. 1, UF-45 and UF-46
VT3	VT weldments	100 % accessible surfaces	ASME *BPVC*, Section V, Article 9	Undercut shall not reduce the thickness in the area (considering both sides) to below the minimum thickness Surface porosity and exposed slag are not permitted on or within 45 mm of seating surfaces
VT4	Others	100 % accessible surfaces	Per applicable industry material specification	Per applicable industry material specification

--`,`,```,`,,,,,,``,,,`,`,`,`,-`-`,,`,,`,`,,`---

Provided by IHS
No reproduction or networking permitted without license from IHS

Licensee=ISATIS Group http://st2014.ir
Not for Resale, 10/27/2014 05:55:32 MDT

Table J.3—Additional Pressure Testing Requirements

Test Type	Quality Specification Level				
	QSL-1	QSL-2	QSL-3	QSL-4	
High-pressure hydrostatic shell test @ 1.5 times the rated pressure per 9.3	Test per 9.3	Test per 9.3	2 tests required. After 1st test reduce pressure to zero and repeat test.	3 tests are required. Reduce pressure to zero between each test.	Tests 1 and 3 shall have a test duration as specified in Table 5. Test 2 shall have an extended duration of four times that stated in Table 5.
High-pressure hydrostatic seat test @ 1.1 times the rated pressure per 9.4	Test per 9.4	Test per 9.4	2 tests each seat required. After 1st test reduce pressure to zero and cycle fully open and fully closed and repeat test.	3 tests each seat is required. Reduce pressure to zero and cycle fully open and fully closed after each test.	Tests 1 and 3 shall have test duration as specified in Table 6. Test 2 shall have an extended duration of four times that stated in Table 6.
Low-pressure pneumatic seat test @ 80 psi to 100 psi per H.3.3 Type II	None	Test each seat per H.3.3 Type II	2 tests each seat required. Reduce pressure to zero and cycle valve fully open and fully closed and repeat test of each seat.	3 tests each seat is required. Reduce pressure to zero and cycle fully open and fully closed after each test.	Tests 1 and 3 shall have test duration as specified in Table 6. Test 2 shall have an extended duration of four times that stated in Table 6.
High-pressure pneumatic shell test @ 1.1 times the rated pressure per H.4.2	None	None	2 tests required. After 1st test reduce pressure to zero and repeat test.	3 tests are required. Reduce pressure to zero between each test.	Tests 1 and 3 shall have test duration as specified in Table H.1. Test 2 shall have an extended duration of four times that stated in Table H.1.
High-pressure pneumatic seat test @ 1.1 times the rated pressure per H.4.3	None	None	2 tests each seat required. After 1st test reduce pressure to zero and cycle fully open and fully closed and repeat test.	3 tests each seat is required. Reduce pressure to zero and cycle fully open and fully closed after each test.	Tests 1 and 3 shall have test duration as specified in Table H.1. Test 2 shall have an extended duration of four times that stated in Table H.1.

Provided by IHS
No reproduction or networking permitted without license from IHS
Licensee=ISATIS Group http://st2014.ir
Not for Resale, 10/27/2014 05:55:32 MDT

Table J.4—Documentation Requirements

Required Documentation to Be Sent with the Valve(s)		QSL-1	QSL-2	QSL-3	QSL-4
1	Certificate of conformance to this specification	X	X	X	X
2	Hardness test report on pressure-controlling parts	N/A	N/A	X	X
3	Hardness test report on pressure-containing parts	N/A	N/A	X	X
4	Pressure test report (including pressure, test duration, test medium, and acceptance criteria) including copy of chart recorder used on pressure test	N/A	X	X	X
5	Calibration certificates on pressure test equipment used (e.g. pressure gauges, transducers, and chart recorders)	N/A	N/A	X	X
6	Heat-treatment records including times and temperatures, e.g. charts	N/A	N/A	X	X
7	Material test reports on all pressure-containing and pressure-controlling parts	N/A	X	X	X
8	For sour service valves, certificate of conformance to ANSI/NACE MR0175/ISO 15156	N/A	X	X	X
9	General arrangements drawings	N/A	X	X	X
10	NDE records	N/A	N/A	X	X
11	Cross-sectional assembly drawings with parts list and materials list	N/A	N/A	X	X
12	Installation, operation, and maintenance instructions/manuals	N/A	X	X	X

Provided by IHS
No reproduction or networking permitted without license from IHS
Licensee=ISATIS Group http://st2014.ir
Not for Resale, 10/27/2014 05:55:32 MDT

Annex K
(informative)

Isolation Valve Features

K.1 General

Table K.1 is intended to give informative guidance on typical valve functions/features and is not intended to either be all-inclusive or restrictive. Individual valve designs exist that have unique sealing characteristics for which the table may not be appropriate or applicable. The user should take guidance from the manufacturer on establishing particular valve features.

The user is responsible for ensuring the operational requirements are consistent with particular valve features including sealing capability and function.

The table and sketches are intended to give definition of the terms “block and bleed” (Figure K.1 and Figure K.2), “double block and bleed” (Figure K.3 and Figure K.4), and “double isolation and bleed” (Figure K.5 and Figure K.6) in a single valve or double valve arrangement as defined by this specification. Other documents, including applicable federal regulations, may have a different definition of these terms.

K.2 Block and Bleed (BB)

BB may be achieved by a connection in the pipework/pipeline downstream of the block valve or from a connection on the valve body when the valve is an upstream seating type.

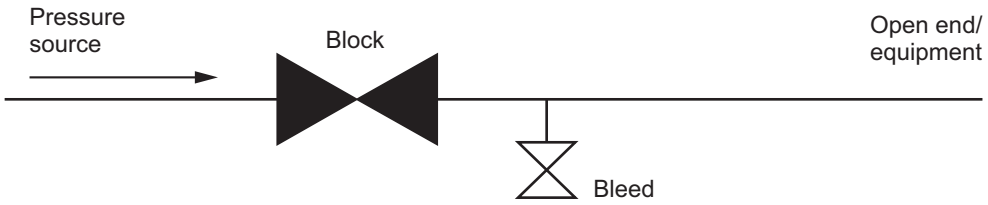

Figure K.1—Block and Bleed—Type A

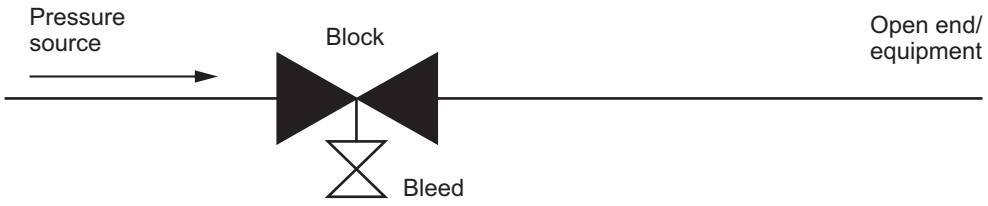

Figure K.2—Block and Bleed—Type B

Provided by IHS
No reproduction or networking permitted without license from IHS
Licensee=ISATIS Group http://st2014.ir
Not for Resale, 10/27/2014 05:55:32 MDT

K.3 Double Block and Bleed (DBB)

The DBB feature of the valve or valves is the ability to segregate two pressure sources and to bleed/vent pressure in the void between the two sealing elements (blocks). The bleed may be in the pipework/pipeline when two valves are used, or in the valve body between the two seats when the valve has the DBB feature.

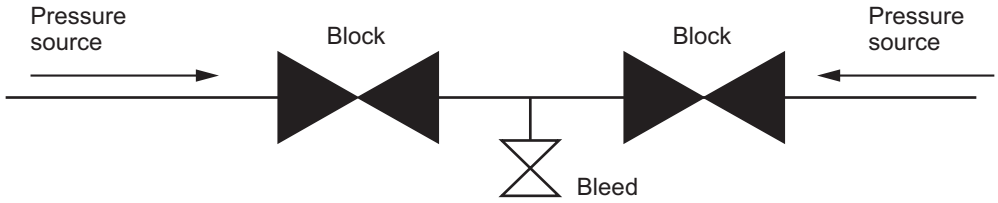

Figure K.3—Double Block and Bleed—Type A

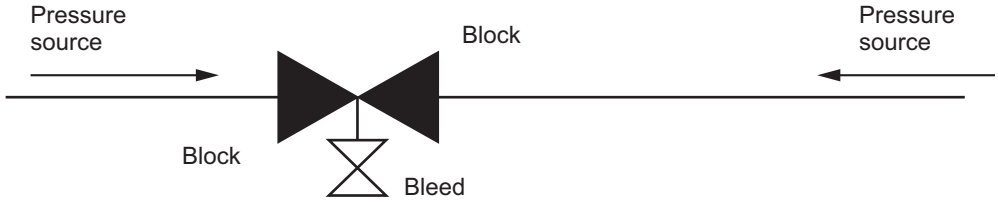

Figure K.4—Double Block and Bleed—Type B

K.4 Double Isolation and Bleed (DIB)

The DIB feature of the valve or valves is the ability to provide two sealing elements to a single pressure source, and to bleed/vent between the two sealing elements. Note that some documents dealing with isolation of equipment may refer to this feature as double block and bleed.

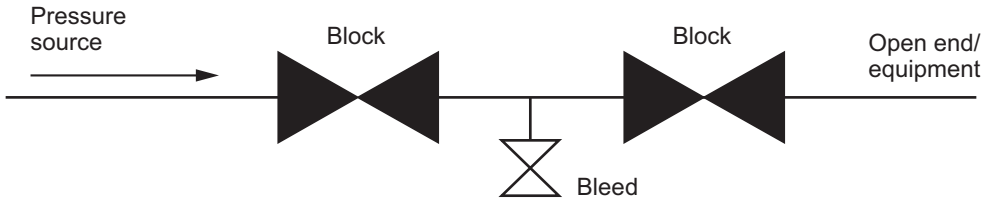

Figure K.5—Double Isolation and Bleed—Type A

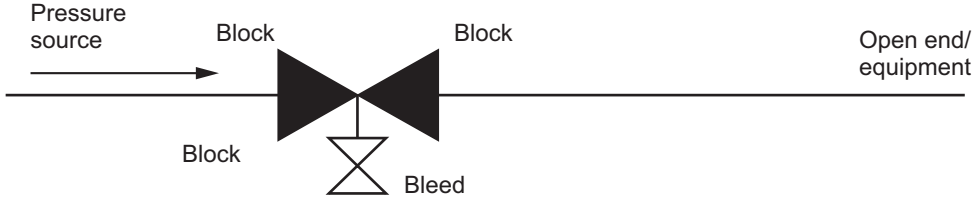

Figure K.6—Double Isolation and Bleed—Type B

Provided by IHS
No reproduction or networking permitted without license from IHS
Licensee=ISATIS Group http://st2014.ir
Not for Resale, 10/27/2014 05:55:32 MDT

Table K.1—Isolation Valve Types

Valve Type	Sealing Arrangement	Block and Bleed	Double Block and Bleed	Double Isolation and Bleed
Two block valves with bleed between	Any valves with bidirectional sealing	Yes	Yes	Yes
Slab and/or through conduit gate	Pressure energized—downstream sealing only/fixed seats (Note 1)	No (Note 2)	No	No
Slab and/or through conduit gate DIB-1	Pressure energized—upstream and downstream sealing (Note 1)	Yes	Yes (Note 3)	Yes (Note 3)
Trunnion mounted ball valve	Upstream sealing, pressure energized, self-relieving (Note 1)	Yes	(Note 4)	No (Note 5)
Trunnion mounted ball valve DIB-1	Upstream and downstream sealing, pressure energized, example, two bidirectional sealing seats (Note 1)	Yes	(Note 4)	(Note 6)
Trunnion mounted ball valve DIB-2	Upstream and downstream sealing, pressure energized, example, one bidirectional and one unidirectional sealing seat (Note 1)	Yes	(Note 4)	Only if the bidirectional seat is on the downstream side (Note 6)
Floating ball valve	Pressure energized	No (Note 2)	No	No
Plug	Pressure energized, downstream sealing	No (Note 2)	No	No
Expanding plug DIB-1	Mechanically energized	Yes	Yes	Yes
Expanding gate DIB-2	Mechanically energized	Yes	Yes (Note 3)	Yes (Note 3)

NOTE 1 The term upstream and downstream refer to the pressure source and open end/equipment respectively and do not refer to flow direction.

NOTE 2 Not possible to bleed from valve body, but bleed may be in downstream pipework/pipeline.

NOTE 3 Depending on detail design of the valve, some valves may have preferred sealing direction and/or a specified sequence of operation.

NOTE 4 Depending on detailed design.

NOTE 5 Downstream seat may provide a second barrier at pressures below the cavity relieving pressure, but will not provide a high pressure barrier.

NOTE 6 Depending on detailed design and ability to achieve testing per H.12.

--`,`,`,,`,,,,,,`,,,`,`,`,`,`,-`-`,,`,`,`,,`---

Provided by IHS
No reproduction or networking permitted without license from IHS

Licensee=ISATIS Group http://st2014.ir
Not for Resale, 10/27/2014 05:55:32 MDT

Annex L
(normative)

External Coating for End Connections

L.1 General

This annex provides coating guidelines of both flange and weld end connections and shall be performed after all testing is completed.

L.2 Raised Face

Valves with raised-face end connections shall have the entire flange coated except for the raised portion (see Figure L.1).

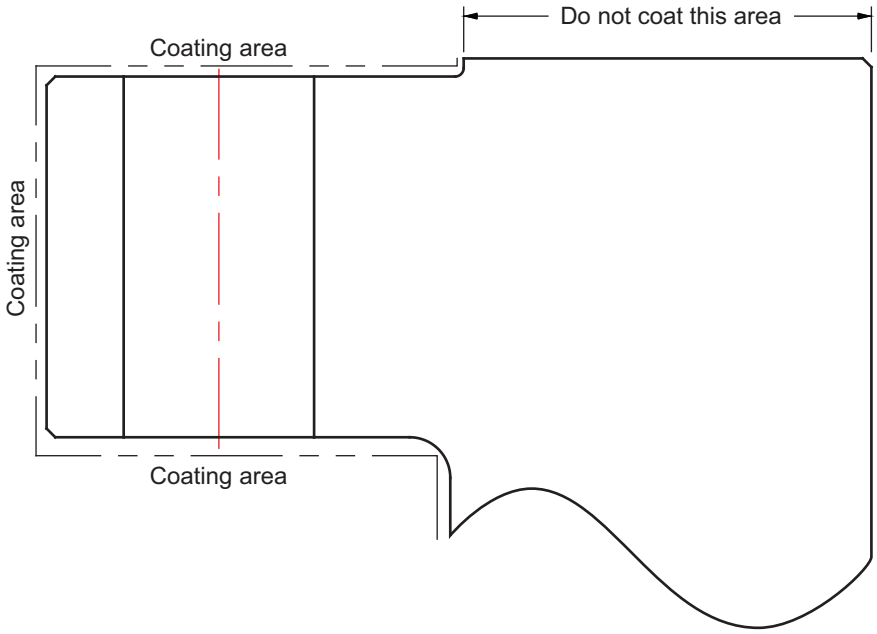

Figure L.1—Raised Face

L.3 Ring Type Joint or Raised Face Ring Type Joint

Valves with ring type joint or raised-face ring type joint end connections shall have the entire flange coated except for the portion from the ring joint O.D. to valve bore (see Figure L.2).

L.4 Weld End

Valves with weld end connections shall have the entire surface coated except for the portion from the O.D. that intersects the weld bevel to valve bore (see Figure L.3).

L.5 Pipe Pup Weld Ends

Valves with pup pipe welded to end connections shall have the entire surface coated except for the portion 1 in. from the weld bevel (see Figure L.4).

Provided by IHS
No reproduction or networking permitted without license from IHS
Licensee=ISATIS Group http://st2014.ir
Not for Resale, 10/27/2014 05:55:32 MDT

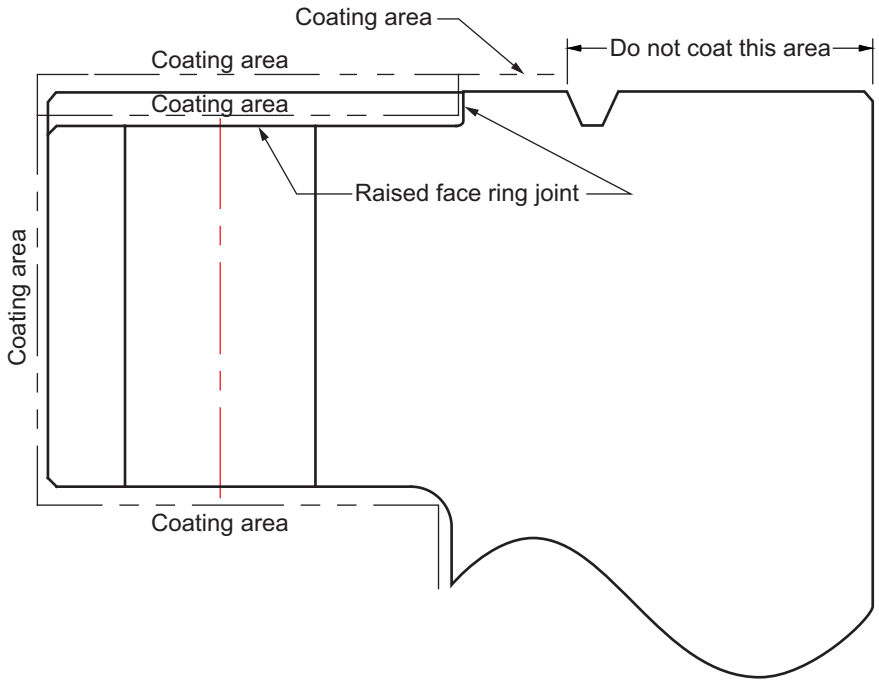

Figure L.2—Ring Type Joint or Raised Face Ring Type Joint

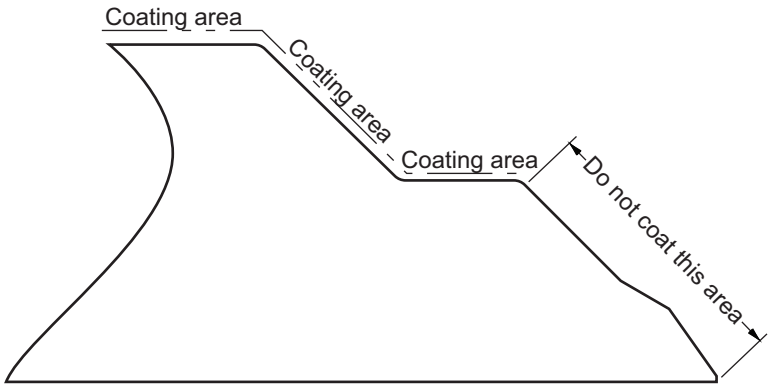

Figure L.3—Weld End

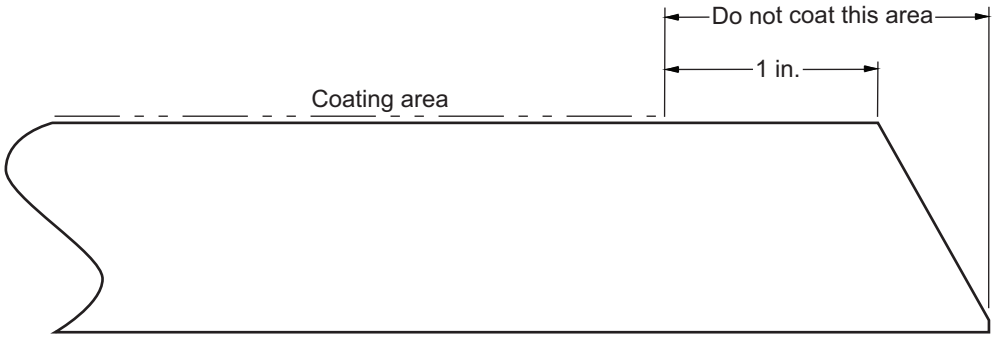

Figure L.4—Pipe Pup Weld Ends

Provided by IHS
No reproduction or networking permitted without license from IHS
Licensee=ISATIS Group http://st2014.ir
Not for Resale, 10/27/2014 05:55:32 MDT

Annex M
(informative)

Marking Example

M.1 General

To illustrate the requirements for marking specified in this specification, an 8 (DN 200) carbon steel gate valve, pressure Class 600 with ring joint end flanges, a (664 mm) face-to-face dimension, a maximum operating pressure rating of 10 MPa (100 bar), 13 % chromium steel trim, and manufactured in June 2017 should be marked as follows.

M.2 On the Body

ABCO	(Item 1: manufacturer)
600	(Item 2: pressure class)
WCC	(Item 5: body material)
8 or DN 200	(Item 6: nominal valve size) NOTE Item 6 can also be marked on nameplate or on both body and nameplate.
R49	(Item 9: ring joint identification on flange edge)
12345	(Item 13: serial number)

M.3 On the Bonnet/Cover

A516-70/12345	(Item 6: bonnet/cover melt identification)

M.4 On Nameplate

ABCO	(Item 1: manufacturer)
600	(Item 2: pressure class)
6D	(Item 17: product specification number)
10.4 MPa or 104 bar at –29 °C; 1500 psi at –20 °F	(Item 3: maximum operating pressure at minimum operating temperature)
10.2 MPa or 102 bar at 121 °C; 1478 psi at 250 °F	(maximum operating pressure at maximum operating temperature)
WCC or WCC/A105	(Item 5: body material) or (body/end connection) for multiple materials
Stem 13CrDisc 13Cr Seat 13Cr/PEEK Seals FKM	(Item 7: trim identification)
664 mm or 26.13	(Item 4: face-to-face/end-to-end dimensions; see 5.4)
8 or DN 200 or 8 × 6 DN 200 ×150 or 8R or DN 200R	(Item 8: nominal valve size for full-opening valve) (Item 8: nominal valve size for reduced-bore valve) (Item 8: nominal valve size for reduced-bore valve)
40 KSI or SMYS 276 MPa	(Item 10: SMYS)
DBB, DIB-1, or DIB-2, as applicable	(Item 13: when seat tests per B.10, B.11, or B.12, respectively)
QSL-1, QSL-2, QSL-3, or QSL-4 as applicable	(Item 14: when specified by the purchaser)
12345	(Item 15: serial number)
6-14 or 6/14 or 6/2014	(Item 16: date of manufacture)
6D-9999	(Item 18: Monogram Program license number)

--`,`,```,`,,,,,,``,,,`,``,`,`,`,-`-`,,`,,`,`,,`---

Provided by IHS
No reproduction or networking permitted without license from IHS
Licensee=ISATIS Group http://st2014.ir
Not for Resale, 10/27/2014 05:55:32 MDT

Annex N
(informative)

Supplementary Documentation Requirements

The purchaser may select supplementary documentation from the list below at time of order placement.

a) calibration records (purchaser to identify requirements for equipment when ordering);

b) certificate of conformance to ANSI NACE MR0175/ISO 15156 (all parts) for sour service valves;

c) certificate of conformance to NACE MR0103 for sour service valves;

d) coating/plating certification;

e) cross-sectional drawings with parts and materials list;

f) current quality management system certificate;

g) design calculations for pressure-containing parts and/or the drive train;

h) design calculations for pressure-controlling parts;

i) design verification by certification body/agency;

j) fire type-test certificate;

k) flow coefficient, C_v or K_v;

l) general arrangements drawings;

m) hardness test report on pressure-containing parts;

n) hardness test report on pressure-controlling parts;

o) heat-treatment certification records (e.g. charts);

p) installation, operation, and maintenance instructions/manuals;

q) material inspection certificates in accordance with EN 10204 or ISO 10474, as applicable (the purchaser specifies the type of certification, and for which parts, when ordering);

r) NDE personnel qualification records;

s) NDE procedures;

t) NDE records;

u) PQR;

v) pressure test report (including pressure, test duration, test medium, and acceptance criteria);

w) type approval by certification body/agency;

x) WPS;

y) WPQ.

Provided by IHS
No reproduction or networking permitted without license from IHS
Licensee=ISATIS Group http://st2014.ir
Not for Resale, 10/27/2014 05:55:32 MDT

Annex O
(informative)

Purchasing Guidelines

O.1 General

This annex provides guidelines to assist the purchaser with valve type selection and specification of specific requirements when ordering valves.

O.2 Field Testing

Pressures during the testing of installed valves should not exceed the pressure rating of the valve by more than 50 % when testing with the valve partially open or by more than 10 % when testing against a closed valve.

Tests specified with the valve half-open may also be performed with the valve fully open, provided the body cavity is simultaneously filled and pressurized through a cavity connection.

NOTE The maximum test pressure for valves fitted with an external pressure relief can be lower (see 5.8).

O.3 Pressure Relief

Certain valve designs trap pressure in the valve body cavity when the valve is in the fully open and/or closed position. High internal pressures can result from the thermal expansion of the fluid trapped in these confined areas.

If the valve has no self-relieving design provision, pressure-relief fittings shall be fitted in the valve body in accordance with 5.8.

O.4 Pigging

The purchaser should examine the valve design for piggability when ordering valves for use in pipelines requiring pigging.

NOTE 1 Venturi or reduced-bore valves are not suitable for most pigging operations, including intelligent pigging, but can allow the passage of foam pigs.

NOTE 2 A valve in which the drive member or the obturator obstructs the bore in the otherwise fully open position (e.g. a dual-plate check valve) is not piggable.

NOTE 3 Certain full-opening valves with pockets can allow bypass of fluid around a short pig or sphere.

O.5 Fire Type-testing

The fire-tested design of valves shall be qualified by fire type-testing in accordance with one of the following: API 6FA, API 6FD, API 607, or ISO 10497.

NOTE For the purposes of this specification, the terms “fire type-test” and “fire test” are synonymous.

O.6 Additional Testing

The purchaser shall specify any additional test requirements not covered by this specification.

Provided by IHS
No reproduction or networking permitted without license from IHS
Licensee=ISATIS Group http://st2014.ir
Not for Resale, 10/27/2014 05:55:32 MDT

O.7 Valve Datasheet

The valve datasheet in Table O.1 can be used to assist with the specification of valves for ordering.

O.8 Gearbox Handwheel

If specified by the purchaser, the handwheel of the gearbox input shaft shall be provided with a torque-limiting device, such as a shear pin, to prevent damage to the drive train.

--`,`,```,`,,,,,``,,,`,``,`,`,-`-`,,`,,`,`,,`---

Provided by IHS
No reproduction or networking permitted without license from IHS

Licensee=ISATIS Group http://st2014.ir
Not for Resale, 10/27/2014 05:55:32 MDT

Table O.1—Valve Datasheet

Materials of construction _____

Valve location and function _____

Nominal valve size _____

Maximum operating pressure _____

Maximum field test pressure (see O.2) _____

Valve pressure class _____

Maximum service temperature _____

Minimum service temperature _____

Liquid or gas service _____

Flow medium composition _____

Special flow requirements: Blow-down, solids, pigs, etc. _____

Valve

Type of valve: Gate _____ Plug _____ Ball _____ Check _____

Design type _____

Full round opening required? _____ Minimum bore _____

End Connections

Upstream pipe: OD _____ ID _____ Material _____

Flanged end? Yes _____ No _____

Plain raised face or ring joint? _____

If ring joint, flat or raised face? _____

Size and pressure class, as per ASME B16.5 _____ ; or MSS SP-44 _____ or ASME B16.47, Series A _____

Ring gasket or other gasket type and size _____

NOTE Gaskets are not furnished as a part of the valve.

Welding end? Yes _____ No _____

Attach specifications for welding-end configuration.

Special flanges or mechanical joints? _____

Downstream pipe: OD _____ ID _____ Material _____

Flanged end? Yes _____ No _____

Plain raised face or ring joint? _____

If ring joint, flat or raised face? _____

Size and pressure class, as per ASME B16.5 _____ ; or MSS SP-44 _____ or ASME B16.47, Series A _____

Ring gasket or other gasket type and size _____

NOTE Gaskets are not furnished as a part of the valve.

Welding end? Yes _____ No _____

Attach specifications for welding-end configuration.

Special flanges or mechanical joints? _____

Length: Any special requirements for end-to-end or face-to-face dimensions? _____

--`,`,```,`,,,,,,``,,,`,``,`,`,`,-`-`,,`,`,`,,`---

Provided by IHS
No reproduction or networking permitted without license from IHS

Licensee=ISATIS Group http://st2014.ir
Not for Resale, 10/27/2014 05:55:32 MDT

Table O.1—Valve Datasheet (Continued)

Valve Operation
Is gearbox with handwheel required? If so, give details: _____
For a handwheel on a horizontal shaft, give distance from centerline of valve opening to handwheel: _____mm
Or, for a handwheel on a vertical shaft, give distance from centerline of valve opening to center of rim of handwheel: _____ mm
NOTE For plug valves having loose wrenches, it is necessary to order wrenches separately.
Wrench required? _____
Locking device required? _____ Type _____
Valve Support
Support ribs or legs required?
Other Requirements
Supplementary requirements (see or Annex G or Annex H or Annex I or Annex J advise which items within each annex)
_____
Fire test design? Yes _____ No _____ Advise which spec. _____
NACE MR0175 or ISO 15156 or NACE MR0103 No ___ Yes ___ Advise which spec._____
If yes, specify % mass fraction of H_2S ___; pH ___; % mass fraction of chlorides ___; temperature ___
Pressure relief: If pressure relief devices are required, are there special requirements for these devices? _____
Drain connections: Any requirements? _____
Bypass connections: Any requirements? _____
Supplementary documentation required? (see Annex N; advise which items) _____
Third-party witness of processes/testing _____
Painting or coating required? _____

Provided by IHS
No reproduction or networking permitted without license from IHS
Licensee=ISATIS Group http://st2014.ir
Not for Resale, 10/27/2014 05:55:32 MDT

Bibliography

[1] API Specification 6DSS, *Specification for Subsea Pipeline Valves*

[2] API Specification Q1, *Specification for Quality Management System Requirements for Manufacturing Organizations for the Petroleum and Natural Gas Industry*

[3] API Specification 20A, *Carbon Steel, Alloy Steel, Stainless Steel, and Nickel Base Alloy Castings for Use in the Petroleum and Natural Gas Industry*

[4] API Specification 20B, *Open Die Shaped Forgings for Use in the Petroleum and Natural Gas Industry*

[5] API Specification 20C, *Closed Die Forgings for Use in the Petroleum and Natural Gas Industry*

[6] API Specification 20E, *Alloy and Carbon Steel Bolting for Use in the Petroleum and Natural Gas Industries*

[7] ASTM E29, *Standard Practice for Using Significant Digits in Test Data to Determine Conformance with Specifications*

[8] ASTM A577, *Standard Specification for Ultrasonic Angle-Beam Examination of Steel Plates*

[9] EN 12516-1 [9], *Industrial valves—Shell design strength—Part 1: Tabulation method for steel valve shells*

[10] EN 12516-2, *Industrial valves—Shell design strength—Part 2: Calculation method for steel valve shells*

[11] EN 13445-3, *Unfired pressure vessels—Part 3: Design*

[12] ISO 5211 [10], *Industrial valves—Part-turn actuator attachments*

[13] ISO 9001, *Quality management systems—Requirements*

[14] MSS SP-25 [11], *Standard Marking System for Valves, Fittings, Flanges and Unions*

[15] SAE AMS-H-6875G [12], *Heat Treatment of Steel Raw Materials*

[16] SAE AMS 2750, *Pyrometry*

[9] European Committee for Standardization, Avenue Marnix 17, B-1000 Brussels, Belgium, www.cen.eu.

[10] International Organization for Standardization, 1, ch. de la Voie-Creuse, Case postale 56, CH-1211 Geneva 20, Switzerland, www.iso.org.

[11] Manufacturers Standardization Society of the Valve and Fittings Industry, Inc., 127 Park Street, NE, Vienna, Virginia 22180-4602, www.mss-hq.com.

[12] SAE International (formerly the Society of Automotive Engineers), 400 Commonwealth Drive, Warrendale, Pennsylvania 15096-0001, www.sae.org.

Provided by IHS
No reproduction or networking permitted without license from IHS
Licensee=ISATIS Group http://st2014.ir
Not for Resale, 10/27/2014 05:55:32 MDT

--`,,`,```,`,,,,,,``,,,`,``,`,`,`-`-`,,`,,`,`,,`---

Provided by IHS
No reproduction or networking permitted without license from IHS

Licensee=ISATIS Group http://st2014.ir
Not for Resale, 10/27/2014 05:55:32 MDT

AMERICAN PETROLEUM INSTITUTE

1220 L Street, NW
Washington, DC 20005-4070
USA

202-682-8000

Additional copies are available online at www.api.org/pubs

Phone Orders:	1-800-854-7179	(Toll-free in the U.S. and Canada)
	303-397-7956	(Local and International)
Fax Orders:	303-397-2740	

Information about API publications, programs and services is available on the web at www.api.org.

Product No. G6D024

--`,,`,,`-`-`,,`,,`,`,,`---

Provided by IHS
No reproduction or networking permitted without license from IHS

Licensee=ISATIS Group http://st2014.ir
Not for Resale, 10/27/2014 05:55:32 MDT